Your Operating Instructions

Digital in the vehicle
Discover the Operating Instructions in the multimedia system under Settings. Begin with Quick Start and discover useful tips.

Vehicle document wallet in the vehicle
Here you can find information on operation, service work and the warranty for your vehicle in printed form.

9075847817

Order no. T907 0703 13 Part no. 907 584 78 17 Edition A-2026

Sprinter

Mercedes-Benz

Sprinter

Operating Instructions

Mercedes-Benz

Front passenger airbag warning

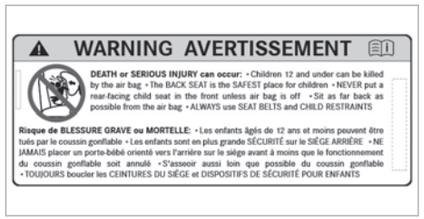

Airbag warning sticker for USA and Canada

WARNING Risk of injury- or fatal accident if the front passenger airbag is enabled

If the front passenger airbag is enabled, a child on the front passenger seat may be struck by the front passenger airbag during an accident.

- NEVER use a rearward facing child restraint on a seat protected by an ACTIVE AIRBAG in front of it, DEATH or SERIOUS INJURY to the CHILD can occur.

Refer to the chapter "Children in the vehicle".

Publication details

Website
Further information about Mercedes-Benz vehicles and about Mercedes-Benz AG can be found on the following websites:

https://www.mercedes-benz.com

https://www.mbusa.com (only USA)

https://www.mercedes-benz.ca (only Canada)

Editorial team
© Daimler VANS USA, LLC

© Mercedes-Benz AG: Not to be reprinted, translated or otherwise reproduced, in whole or in part, without written permission from Mercedes-Benz AG.

Vehicle manufacturer
Mercedes-Benz AG

Mercedesstraße 120

70372 Stuttgart

Germany

Vehicle dealer
Daimler VANS USA, LLC

One Mercedes-Benz Drive

Sandy Springs, GA 30328

https://www.mbusa.com (only USA)

https://www.mbvans.com

Customer Assistance Center:

1-877-762-8267

Mercedes-Benz Canada, Inc.

2680 Matheson Blvd E, Suite 400

Mississauga, ON L4W 0A5

https://www.mercedes-benz.ca (only Canada)

Customer Assistance Center:

1-800-387-0100

Daimler VANS USA, LLC and Mercedes-Benz Canada, Inc. are Mercedes-Benz Group AG enterprises.

Canada only: "Authorised Sprinter Dealer" is defined as an authorised Mercedes-Benz Sprinter Dealer.

As at 13.12.24

Welcome to the world of Mercedes-Benz

Before you first drive off, read these Operating Instructions carefully and familiarize yourself with your vehicle. For your own safety and a longer operating lifespan, follow the instructions and warning notices in these Operating Instructions. Disregarding them may lead to damage to the vehicle or injury to people.

Damage to the vehicle caused by failure to observe the instructions is not covered by the Mercedes-Benz limited warranty.

The equipment features or product designations of your vehicle may differ from the content described in the Operating Instructions. The Operating Instructions describe the following content:

- The models and the standard and special equipment available at the time of these Operating Instructions going to press.
- The models and the standard and special equipment only available in certain countries.
- The models and the standard and special equipment which will only become available at a later date.

Please note that your vehicle may not be equipped with all features described. This also applies to safety-critical systems and functions. Your vehicle may therefore differ, in individual cases, from that shown in the descriptions and illustrations.

Mercedes-Benz keeps advancing its vehicles constantly and reserves the right to introduce changes in the following areas:

- Design
- Equipment
- Technical features

The latest and complete information about your vehicle and the description of any subsequently uploaded functions are contained in the Digital Operating Instructions in the multimedia system.

The original purchase agreement for your vehicle includes a list of the equipment features in your vehicle at the time of delivery.

The following documents are components of the vehicle:

- Digital Operating Instructions in the multimedia system
- Printed Operating Instructions
- Maintenance Booklet (USA only)
- Equipment-dependent supplements
- Supplementary documents

Always keep these documents in the vehicle. Ensure that all documents are in the vehicle or passed on when the vehicle is sold or loaned out.

For questions concerning equipment and operation, please contact an authorized Mercedes-Benz Center.

Note on vehicles which are equipped by body manufacturers

Always observe the operating instructions provided by the body manufacturer. You could otherwise fail to recognize potential dangers.

The latest information on service and warranty, along with a digital copy of this Operator's Manual, can be found on the following website.

USA only:

https://www.mbvans.com/en/vehicle-information

Canada only:

https://www.mercedes-benz-vans.ca/en/owners#manuals (English)

https://www.mercedes-benz-vans.ca/fr/owners#manuals (French)

Daimler VANS USA, LLC

Mercedes-Benz Canada, Inc.

A Mercedes-Benz Group AG Company

Symbols 4

At a glance 6
Cockpit 6
Instrument cluster 8
Overhead control panel 9
Door operating unit 13
Emergencies and breakdowns 15

Digital Operator's Manual 17
Calling up the Digital Operator's Manual 17

General notes 18
Environmental protection 18
Mercedes-Benz Genuine Parts 18
Attachments, add-on equipment, installations and conversions 19
Service and vehicle operation 20
Operating safety 21
Installing the license plate on the front license plate bracket 22
Declarations of conformity and notes on driving in different countries 22
Diagnostics connection 23
Notes on changes to the engine output 24
Qualified specialist workshop 24
Vehicle registration 24
Correct use of the vehicle 24
Multi-purpose vehicle 25
Notes for persons with electronic medical aids 25
Problems with your vehicle 25
"Reporting safety defects" 26
Limited Warranty 26
QR codes for rescue card 26
Data storage 26
Copyright 29

Occupant safety 31
Brief overview of most important points 31
Information on the automatic functions of the restraint system 34
Purpose and function of the restraint system 35
Seat belts 38
Airbags 38

Children in the vehicle 39
Brief overview of most important points 39
Important safety notes 39
Securing the child restraint system 42
Child safety locks 45
Occupant presence reminder 46

Opening and closing 48
SmartKey 48
Doors 51
Sliding door 54
Electric sliding door 56
Rear-end doors 59
Partition sliding door 61
Electrical step 62
Side window 63
Anti-theft protection 65

Seats and stowage 68
Notes on the correct driver's seat position 68
Notes on grab handles 68
Seats 68
Steering wheel 81
Stowage areas 82
Information about the bottle holder 82
Cup holder 82
Ashtray and cigarette lighter 83
Sockets 84
Wirelessly charging the mobile phone and coupling with the exterior antenna 85
Installing and removing the floor mats 86

Light and vision 88
Lighting 88
Adjusting the interior lighting 91
Changing bulbs 95
Windshield wipers 99
Mirrors 101

Climate control 104
Overview of climate control systems 104
Operating climate control systems 106
Operating air vents 109
Auxiliary heating 110
Operating cargo compartment ventilation 111

Driving and parking 112
Driving 112
Battery main switch 125
Automatic transmission 126
All-wheel drive 129
Electronic level control 130
Refueling 133

Parking ... 140
Driving and driving safety systems ... 145
Work mode ... 178
Trailer operation ... 179

Instrument cluster and on-board computer ... 185
Notes on the instrument cluster ... 185
Overview of the instrument cluster ... 185
Operating the on-board computer ... 186
Overview of status displays on the display ... 187
Overview of menus on the on-board computer ... 187
Menus and submenus ... 187
Adjusting the instrument lighting ... 191

Mercedes-Benz Support calls and Digital Extras ... 192
Mercedes-Benz Support calls ... 192
Mercedes-Benz Connect ... 194
MB Apps (Digital Extras) ... 195

MBUX multimedia system ... 197
Overview and operation ... 197
System settings ... 202
Navigation ... 205
Telephone ... 210
Overview of Smartphone Integration ... 211
Radio and media ... 213
Sound settings ... 214

Transporting ... 215
Notes on loading guidelines ... 215
Notes on distributing the load within the vehicle ... 216
Securing loads ... 216
Carrier systems ... 218
Placing a load on the wheel arch ... 218

Maintenance and care ... 220
ASSYST PLUS service interval display ... 220
Engine compartment ... 220
Cleaning and care ... 228

Breakdown assistance ... 234
Emergency ... 234
Emergency Call System ... 235
Flat tire ... 236
Battery ... 237
Towing or tow-starting ... 242
Electrical fuses ... 246
Vehicle tool kit ... 247
Hydraulic jack ... 248

Wheels and tires ... 250
Information on noise or unusual driving characteristics ... 250
Notes on regularly inspecting wheels and tires ... 250
Information on driving with summer tires ... 250
Information on M+S tires ... 251
Notes on snow chains ... 251
Tire pressure ... 252
Loading the vehicle ... 259
Tire labeling ... 261
Information on definitions (tires and loading) ... 264
Changing a wheel ... 266
Spare wheel ... 273

Technical data ... 278
Information on the technical data ... 278
On-board electronics ... 278
Radio regulations ... 279
Vehicle identification plate, vehicle identification number (VIN) and engine number ... 280
Operating fluids and capacities ... 282
Vehicle data ... 291
Trailer hitch ... 292
Cargo tie-down points and carrier systems ... 296

Display messages and warning and indicator lamps ... 298
Display messages ... 298
Indicator and warning lamps ... 321

Index ... 330

In these Operating Instructions, you will find the following symbols:

WARNING Danger due to failure to observe the warning notices

Warning notices draw your attention to hazards that may endanger your health or life, or the health or life of others.

▶ Observe the warning notices.

ENVIRONMENTAL NOTE Environmental damage due to failure to observe environmental notes

Environmental notes include information on environmentally responsible behavior or environmentally responsible disposal.

▶ Observe environmental notes.

NOTE Damage to property due to failure to observe notes on material damage

Notes on material damage inform you of risks which may lead to your vehicle being damaged.

▶ Observe notes on material damage.

ⓘ These symbols indicate useful instructions or further information that could be helpful to you.

▶	Instructions
(→ page)	Further information on a topic
Display	Messages on the display
⮱▶	Highest menu level to be selected in the multimedia/audio system
▶▶	Corresponding submenus to be selected in the multimedia/audio system
*	Indicates a cause

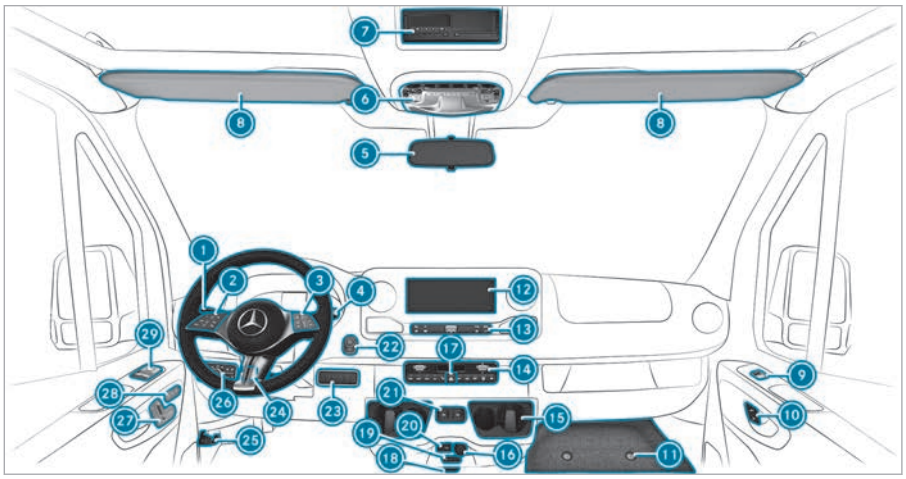

1 Combination switch		
Turn signal indicators	→	89
High beam	→	89
Windshield wipers	→	99
Rear window wiper	→	100
2 Control panel for the on-board computer:	→	186
Cruise control or variable limiter	→	152
Active Distance Assist DISTRONIC	→	156
3 Control panel for the MBUX multimedia system	→	198
4 DIRECT SELECT lever	→	126
5 Inside mirror	→	103
Digital inside mirror	→	102
6 Overhead control panel	→	91
7 Device installation frame, e.g. for mounting a tachograph or the switch clock for the stationary heater		
8 Sun visor		
9 Front passenger window lifter	→	63
10 Central locking system	→	51
11 Stowage compartment cover	→	247
12 MBUX multimedia system display	→	197
13 MBUX multimedia system control elements	→	198
14 Climate control system	→	104
15 Cup holder	→	82
16 12 V socket	→	84
17 Hazard warning lights	→	90
18 Key slot for KEYLESS-START	→	114
19 115 V socket	→	84
20 USB port	→	82
21 Opens and closes the electric sliding door	→	56
22 Start/stop button	→	113
23 Right-hand switch panel		
Activates/deactivates DSR	→	154
Raises/lowers the vehicle level	→	131
Activates/deactivates cargo compartment ventilation	→	111
24 Adjusts the steering wheel	→	81
25 Opens the hood	→	220
26 Light switch	→	88
27 Adjusts the driver's seat	→	71

㉘ Seat heating → 80

㉙ Driver's window lifter → 63

Instrument cluster (example)

1	Speedometer	→	185
2	ESP®	→	322
3	Distance warning	→	325
4	Seat belt not fastened	→	322
5	Turn signal light	→	89
6	Instrument cluster display	→	185
7	Tire pressure loss warning lamp	→	322
8	Engine diagnosis	→	326
9	Pre-glow and malfunction in pre-glow system		
10	Tachometer	→	185
11	PARK and (P) (USA) or (P) (Canada) Parking brake applied (red)	→	322
12	BRAKE and (!) (USA) or (!) (Canada) Brakes (red)	→	322
13	Electrical malfunction	→	326
14	Electric power steering malfunction	→	325
15	Coolant temperature indicator and coolant too hot	→	326
16	(P) Electric parking brake (yellow)	→	322
17	Restraint system	→	34
18	High beam	→	89
19	Low beam	→	88
20	Sidelights	→	88
21	Fuel level indicator and fuel reserve with fuel filler cap location indicator	→	326
22	Fog light	→	88
23	Rear fog light	→	88
24	(!) Brakes (yellow)		
25	ABS malfunction	→	322
26	ESP® deactivated	→	322

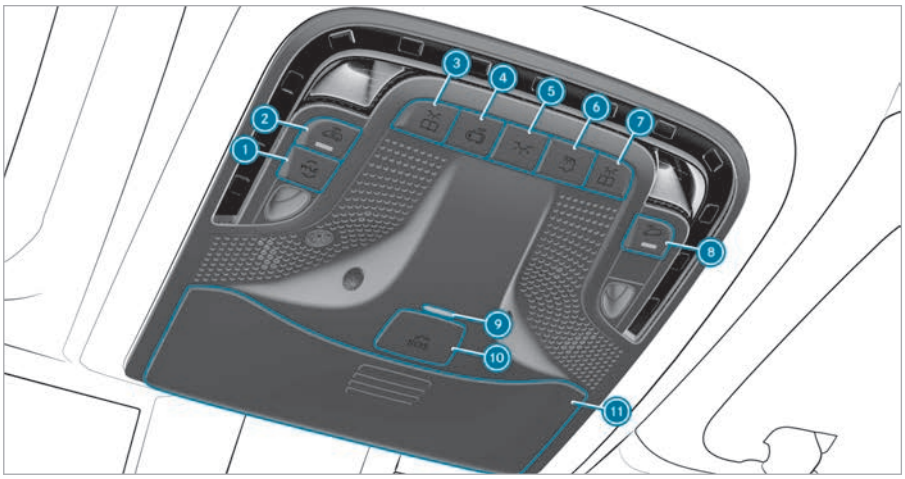

Version 1 of the overhead control panel

ⓘ Depending on the equipment, certain buttons may be unavailable or unassigned.

1. me button for Mercedes-Benz Connect calls → 192
2. Switches interior protection on/off → 67
3. Switches the left-hand reading light on/off
4. Switches automatic light control on/off
5. Switches the front interior lighting on/off
6. Switches rear interior lighting on/off (unassigned, depending on equipment)
7. Switches the right-hand reading light on/off
8. Switches the tow-away alarm on/off → 66
9. ATA indicator lamp → 65
10. SOS emergency call button cover → 192
11. Glasses compartment

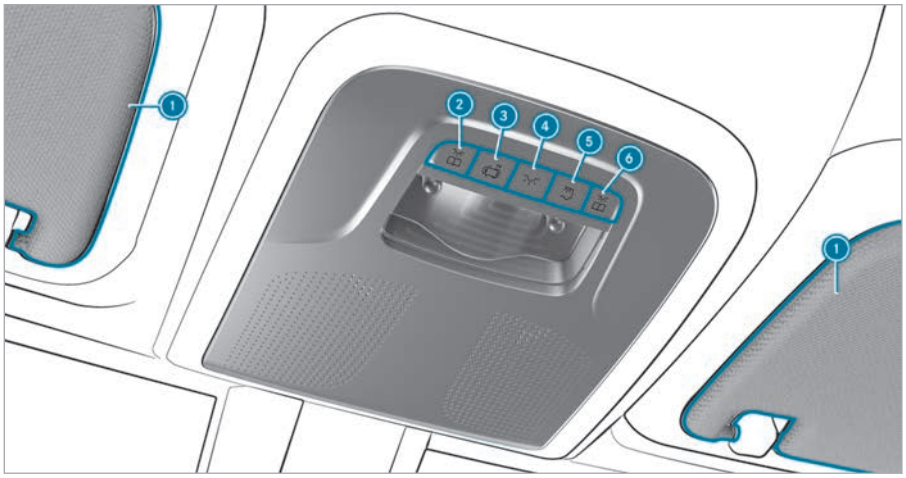

Version 2 of the overhead control panel

ⓘ Depending on the equipment, certain buttons may be unavailable or unassigned.

1. Sun visors
2. Switches the left-hand reading light on/off
3. Switches automatic light control on/off
4. Switches the front interior lighting on/off
5. Switches the rear interior lighting on/off
6. Switches the right-hand reading light on/off

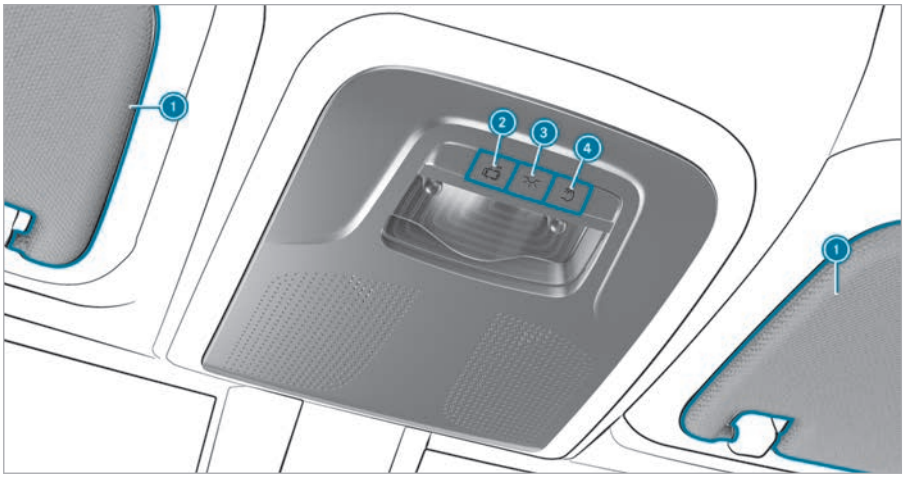

Version 3 of the overhead control panel

ⓘ Depending on the equipment, certain buttons may be unavailable or unassigned.

1. Sun visors
2. Switches automatic light control on/off
3. Switches the front interior lighting on/off → 67
4. Switches the rear interior lighting on/off

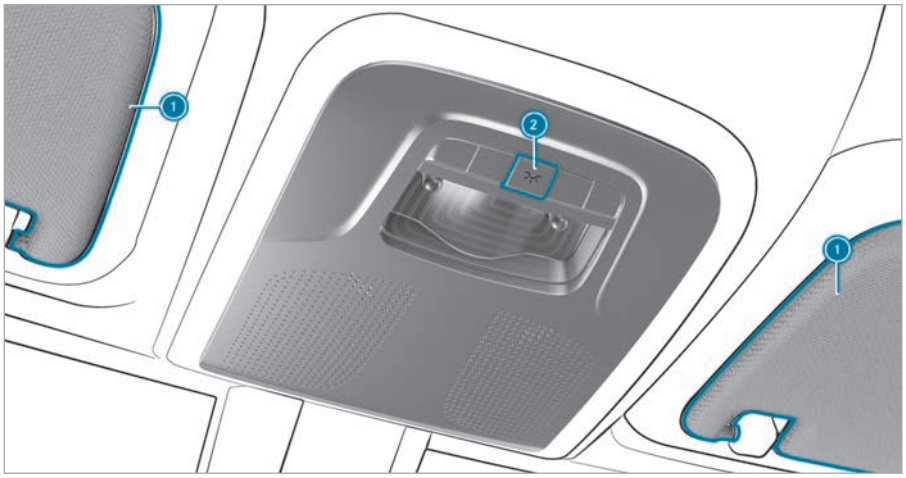

Version 4 of the overhead control panel

ⓘ Depending on the equipment, certain buttons may be unavailable or unassigned.

1	Sun visors
2	Switches the interior lighting on/off

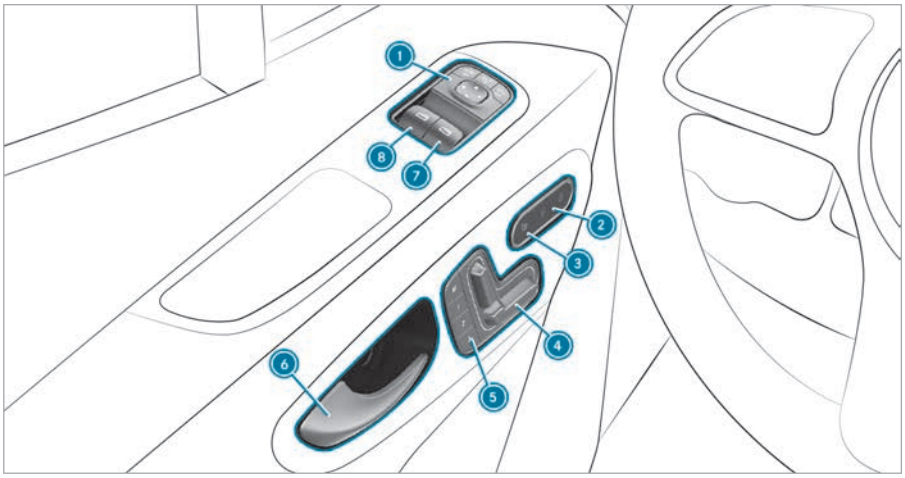

Door operating unit of vehicles with electrically adjustable seat

1 Adjusts the outside mirrors	→	101
2 Unlocks/locks the central locking system	→	52
3 Switches seat heating on/off	→	80
4 Adjusts the front seats electronically	→	71
5 M 1 2 3 Operates the memory function	→	73
6 Opens the door	→	51
7 Opens/closes the right-hand side window	→	63
8 Opens/closes the left-hand side window	→	63

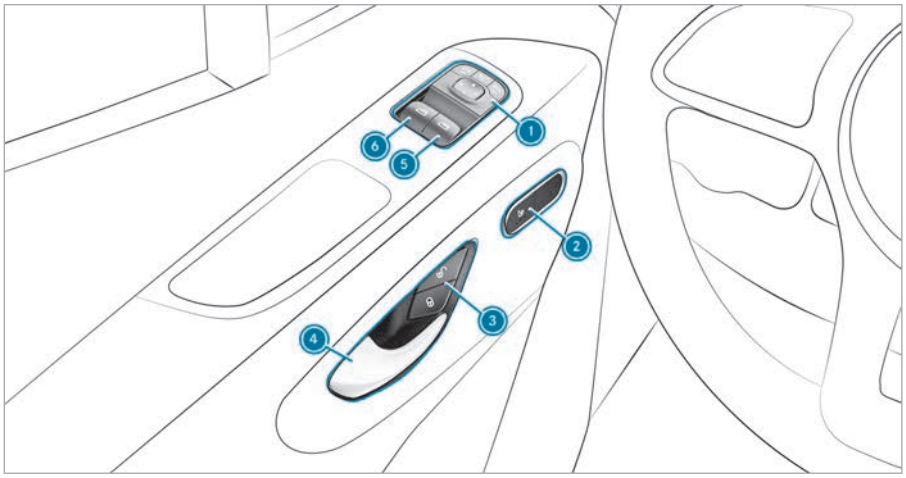

Door operating unit of vehicles without electrically adjustable seat

1 Adjusts the outside mirrors	→	101
2 Switches seat heating on/off	→	80
3 Unlocks/locks the central locking system	→	52
4 Opens the door	→	51
5 Opens/closes the right-hand side window	→	63
6 Opens/closes the left-hand side window	→	63

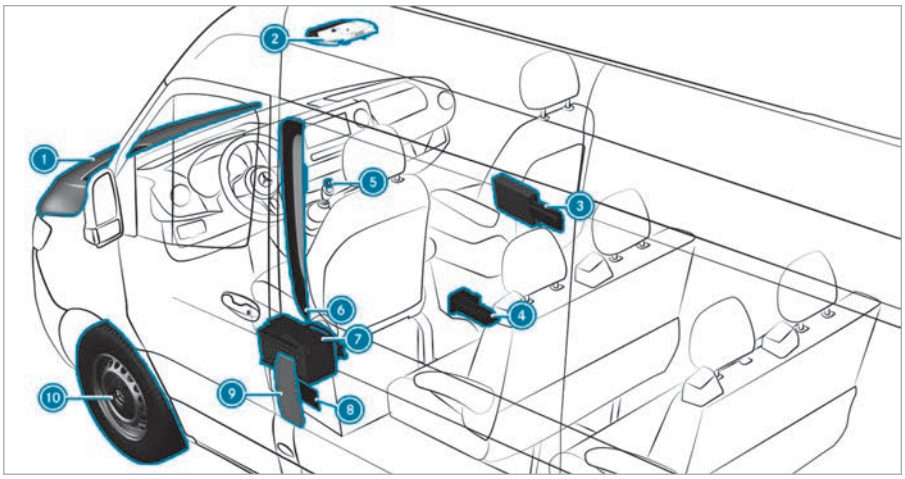

1 Check and top up operating fluids	→	282
Starting assistance	→	238
2 Buttons for the SOS emergency call system and breakdown assistance	→	236
3 Warning lamp	→	234
Safety vest	→	234
First-aid kit (soft sided)	→	234
4 Vehicles with rear wheel drive: hydraulic jack and tire-change tool kit	→	248
5 Hazard warning lights	→	90
6 B-pillar, driver's side at the level of the door handle		
QR code for accessing the rescue card	→	26
Vehicles with all-wheel drive: warning notice Permissible Towing Methods	→	242
7 Disconnects the starter battery	→	241
8 Tire pressure table at the base of the driver's seat	→	253
9 Fuel filler flap with information label on fuel type	→	133
10 Flat tire	→	236

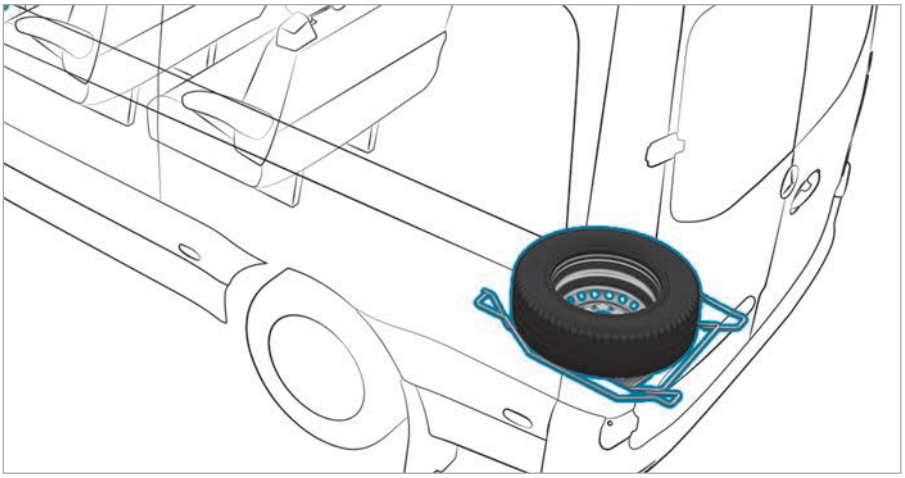

Spare wheel (example) → 273

Calling up the Digital Operator's Manual

Multimedia system:

→ ⌂ ▸▸ Settings ▸▸ Info
▸▸ Open Digital Operator's Manual

The Digital Operator's Manual describes the functions and operation of the vehicle and the multimedia system.

▶ Select one of the following menu items in the Digital Operator's Manual:

- Quick start: these are the first steps towards adjusting your seat (driver's side).
- Tips: information is provided here to prepare you for certain everyday situations with your vehicle.
- Messages: receive additional information regarding messages on the instrument cluster display.
- Language: select the language for the Digital Operator's Manual.

You can search for keywords using the search field Search in order to find quick answers to questions regarding operation of the vehicle.

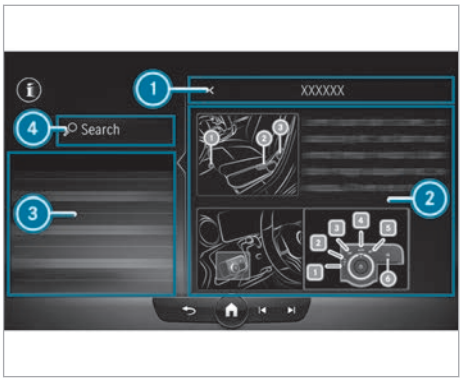

1. Back
2. Contents section
3. Menu
4. Search

Some sections in the Digital Operator's Manual, suchas warning notes, can be expanded and collapsed.

Additional methods of calling up the Digital Operator's Manual:

MBUX Voice Assistant: call-up via the voice control system

Global search: call up search results for contents of the Digital Operator's Manual in the Home Screen

ⓘ The Digital Operator's Manual is deactivated for safety reasons while driving.

Environmental protection

ENVIRONMENTAL NOTE Environmental damage due to operating conditions and personal driving style

The pollutant emission of the vehicle is directly related to the vehicle's operation.

Operate the vehicle in an environmentally responsible manner to make a contribution to environmental protection. To do this, observe the following recommendations on operating conditions and your personal driving style.

Operating conditions:

- Make sure that the tire pressures are always correct.
- Do not transport any unnecessary weight (e.g. a roof luggage rack which is no longer required).
- Observe the service intervals.
  A regularly serviced vehicle will contribute to environmental protection.
- Always have maintenance work carried out at a qualified specialist workshop.

Personal driving style:

- Do not depress the accelerator pedal when starting the engine.
- Do not warm up the vehicle while stationary.
- Drive carefully and maintain a sufficient distance to other vehicles.
- Avoid frequent, sudden acceleration and braking.
- Shift gears in good time and use each gear only up to ⅔ of its maximum engine speed.
- Switch off the vehicle in stationary traffic.
- Drive in a fuel-efficient manner. Pay attention to the ECO display for a fuel-efficient driving style.

Environmental issues and recommendations
It is recommended that you re-use or recycle materials instead of simply disposing of them.

The relevant environmental guidelines and regulations serve to protect the environment and should be followed carefully.

Mercedes-Benz Genuine Parts

ENVIRONMENTAL NOTE Environmental damage due to not using recycled reconditioned components

Mercedes-Benz AG offers recycled reconditioned components and parts with the same quality as new parts. The same entitlement from the Limited Warranty is valid as for new parts.

- Use recycled reconditioned components and parts from Mercedes-Benz AG.

NOTE Impairment of the operating efficiency of the restraint systems due to the installation of accessory parts or due to repairs or welding

Air bags and seat belt tensioners as well as control units and sensors for the restraint systems may be installed in the following areas of your vehicle:

- Door frame
- Roof frame
- Doors
- Door pillars
- Sill
- Seats
- Cockpit
- Instrument cluster
- Center console

- Do not install accessory parts such as audio systems in these areas.
- Do not carry out repairs or welding.
- Have accessories retrofitted at a qualified specialist workshop.

If you use parts, tires, wheels or safety-relevant accessories that have not been approved by Mercedes-Benz, the operating safety of the vehicle may be jeopardized. Safety-relevant systems such as the brake system may malfunction. Only use Mercedes-Benz Genuine Parts or parts of equal quality. Only use tires, wheels and accessory parts that are approved for your vehicle model.

Mercedes-Benz tests original parts, conversion parts and accessory parts that have been approved for your vehicle model for reliability, safety and suitability. Despite ongoing market research, we are unable to assess other parts.

We therefore accept no responsibility for the use of such parts in Mercedes-Benz vehicles, even if they have been officially approved or independently approved by a testing center.

In some other countries, certain parts are officially approved for installation or modification only if they comply with legal requirements. All Mercedes-Benz Genuine Parts satisfy these requirements. Make sure that all parts are suitable for your vehicle.

Always specify the vehicle identification number (VIN) and the engine number when ordering Mercedes-Benz Genuine Parts (→ page 280).

Attachments, add-on equipment, installations and conversions

Notes on body/equipment mounting directives

For safety reasons, have add-on equipment produced and installed in accordance with the valid Mercedes-Benz body/equipment mounting directives. These body/equipment mounting directives ensure that the chassis and add-on equipment form one unit and that the greatest possible level of operational and driving safety is achieved.

Both vehicle manufacturers and body manufacturers must always ensure that the products they manufacture come into circulation only in a safe state and do not pose any risks to people. Otherwise, there may be consequences under civil, criminal or public law. All manufacturers are responsible for the products that they have manufactured. Manufacturers of attachments, add-on equipment, installations and conversions must guarantee compliance with Directive 2001/95/EC on general product safety.

The body manufacturer must also ensure compliance with standards concerning operational reliability (in accordance with ISO 26262) and cyber security (in accordance with ISO 21434 and UN R155).

Mercedes-Benz recommends the following procedure for safety reasons:

- Do not make any other changes to the vehicle.
- Obtain approval from the dealer named on the inside title page in the event of deviations from the approved body/equipment mounting directives.

Acceptance tests performed by public test bodies or official approvals do not rule out safety risks.

Observe the information about Mercedes-Benz Genuine Parts (→ page 18).

ⓘ You can obtain further information at a qualified specialist workshop.

ⓘ You can find further information on requesting a check for compatibility with the basic vehicle in the body/equipment mounting directives.

⚠ **WARNING** Risk of accident and injury in the event of improper conversions or changes to the vehicle

Conversions or changes to the vehicle can prevent systems or components from functioning properly and/or jeopardize the vehicle's operational safety.

▶ Always have conversions or changes to the vehicle carried out at a qualified workshop.

If you intend to make changes to your vehicle, Mercedes-Benz strongly recommends that you contact the dealer. They will give you all the information you need. There may be a charge for this service.

If body manufacturers and dealers make modifications that affect the final inspection of the engine, vehicle or equipment, they must accept sole responsibility for the vehicle. This also applies to marking and documenting the vehicle parts affected by the changes that they make.

You are responsible for ensuring and providing evidence that the following conditions are met:

- The vehicle complies with all relevant standards and regulations that are affected by the modification.
- The modified vehicle still meets vehicle safety standards and emissions laws and regulations.
- The modification does not impair the safety of the vehicle.

Mercedes-Benz is not responsible for the final inspection, product liability or warranty claims resulting from modification. This applies to the following points:

- The modified components or systems
- The resultant violation of emissions laws and regulations or vehicle safety standards
- All consequences resulting from the modified, less safe or even faulty vehicle

Mercedes-Benz accepts no responsibility as final manufacturer or for the resultant product liability.

Notes on the radiator
Even seemingly minor changes to the vehicle, such as attaching a radiator grill in winter, are not permitted. Do not cover the radiator. Do not use any thermal mats, insect protection covers etc.

Otherwise, the values of the vehicle's diagnostic system will be distorted. Some of these values are prescribed by law and must be correct at all times.

Notes on the cargo floor
The factory equips the vehicle with a wooden or plastic cargo floor; this is an integral part of the vehicle structure. If you have the cargo floor removed, the vehicle body may be damaged. Load securing will then be impaired and the maximum loading capacity of the tie-down points will no longer be guaranteed. Therefore, do not have the cargo floor removed.

Notes on the partition
Without a partition, vehicles that are approved as commercial vehicles (N1, N2) do not fulfill ISO 27956, which describes the equipment for properly securing a load in delivery vehicles. If the vehicle is used to transport goods, retrofitting the partition is strongly recommended, as properly securing the load in vehicles without a partition will always be complex.

Service and vehicle operation

Warranty

The limited warranty for your vehicle is in accordance with the warranty terms and conditions in the Service and Warranty Information booklet.

Your Mercedes-Benz will replace and repair all factory-installed parts in accordance with the terms of the following warranty terms and conditions:

- New Vehicle Limited Warranty
- Exhaust System Warranty
- Emission Systems Warranty
- California, Connecticut, Maine, Massachusetts, New York, Pennsylvania, Rhode Island and Vermont Emission Control System Warranty
- State Warranty Enforcement Laws ("Lemon Laws")

Replacement parts and accessories are covered by the Mercedes-Benz Parts and Accessories Warranties.

These are available at any Mercedes-Benz.

ⓘ Should you lose your Service and Warranty Information booklet, have an Mercedes-Benz arrange for a replacement. The new Service and Warranty Information booklet will be posted to you.

Vehicle operation outside the USA or Canada

When you are traveling abroad with your vehicle, observe the following points:

- Service points or replacement parts may not be available immediately.
- Unleaded fuel for vehicles with a catalytic converter may not be available. Leaded fuel can cause damage to the catalytic converter.
- The fuel may have a considerably lower octane number. Unsuitable fuel can cause engine damage.

Certain Mercedes-Benz models are available in Europe through the European Delivery Program.

For more information, please consult an authorized Mercedes-Benz Center or write to one of the following addresses:

In the USA:

Daimler VANS USA, LLC

One Mercedes-Benz Drive

Sandy Springs, GA 30328

In Canada:

Mercedes-Benz Canada, Inc.

2680 Matheson Blvd E, Suite 400

Mississauga, ON L4W 0A5

Maintenance

USA only:

Your customer service advisor will record every service for you in the Service and Warranty Information booklet.

Roadside Assistance

Roadside Assistance offers technical help in the event of a breakdown. Your calls to the toll-free Roadside Assistance Hotline are answered by our agents 24 hours a day, 365 days a year.

1-877-762-8267 (USA)

1-800-387-0100 (Canada)

USA only: You can find further information in the Mercedes-Benz Roadside Assistance Program brochure.

Canada only: You can find further information in the “Roadside Assistance” section in the Warranty Information Guide. Please refer to Mercedes-Benz Canada’s website:

https://www.mercedes-benz-vans.ca/en/owners#manuals (English)

https://www.mercedes-benz-vans.ca/fr/owners#manuals (French)

Change of address or change of ownership

In the event of a change of address, please send us the "Notification of Address Change" in the Service and Warranty Information booklet, or simply call the Customer Assistance Center (USA) on the hotline number 1-877-762-8267 or Customer Service (Canada) on 1-800-387-0100. This will give us the opportunity to get in touch with you as soon as possible when necessary.

If you sell your Mercedes, please leave the entire literature in the vehicle so that it is available to the next owner. If you have purchased a used vehicle, please send us the "Notice of Purchase of Used Car" in the Service and Warranty Information booklet or call the Customer Assistance Center (USA) on the hotline number 1-877-762-8267 or Customer Service (Canada) on 1-800-387-0100.

Possible danger due to substances hazardous to health

In compliance with Proposition 65 (“Prop65”), the following detachable label has been added to each vehicle sold in California:

WARNING

Operating, servicing and maintaining a passenger vehicle, pickup truck, van or off-road motor vehicle can expose you to chemicals including engine exhaust, carbon monoxide, phthalates, and lead, which are known to the State of California to cause cancer and birth defects or other reproductive harm. To minimize exposure, avoid breathing exhaust, do not idle the engine except as necessary, service your vehicle in a well-ventilated area and wear gloves or wash your hands frequently when servicing your vehicle. For more information go to www.P65Warnings.ca.gov/passenger-vehicle

A 000 817 82 02

Operating safety

WARNING Risk of accident due to malfunctions or system failures

If you do not have the prescribed service/maintenance work or any required repairs carried out, this could result in malfunctions or system failures.

- Always have the prescribed service and maintenance work or any required repairs carried out in a qualified specialist workshop.

WARNING Risk of accident or injury due to incorrect modifications on electronic component parts

Modification of electronic components, their software or wiring could impair their function and/or the function of other networked component parts or safety-relevant systems.

This can endanger the operating safety of the vehicle.

- Never tamper with the wiring and electronic component parts or their software.
- You should have all work on electrical and electronic components carried out at a qualified specialist workshop.

Please observe the "On-board electronics" section in the "Technical data".

WARNING Risk of fire caused by flammable material on hot exhaust system components

Flammable material such as leaves, grass or twigs may ignite if they come into contact with hot parts of the exhaust system.

- When driving on an unpaved road or off-road, check the vehicle underside regularly.
- In particular, remove trapped plant parts or other flammable material.
- If there is damage, consult a qualified specialist workshop immediately.

NOTE Damage to the vehicle due to driving too fast and due to impacts to the vehicle underbody or suspension components

In the following situations, in particular, there is a risk of damage to the vehicle:

- The vehicle becomes grounded, e.g. on a high curb or an unpaved road
- The vehicle is driven too fast over an obstacle, e.g. a curb, speed bump or pothole
- A heavy object strikes the underbody or suspension components

In situations such as these, damage to the body, underbody, suspension components, wheels or tires may not be visible. Components damaged in this way can unexpectedly fail or, in the case of an accident, may no longer absorb the resulting force as intended.

If the underbody paneling is damaged, flammable materials such as leaves, grass or twigs can collect between the underbody and the underbody paneling. These materials may ignite if they come into contact with hot parts of the exhaust system.

▶ Have the vehicle checked and repaired immediately at a qualified specialist workshop.

or

▶ If driving safety is impaired while continuing your journey, pull over and stop the vehicle immediately, while paying attention to road and traffic conditions, and contact a qualified specialist workshop.

Installing the license plate on the front license plate bracket

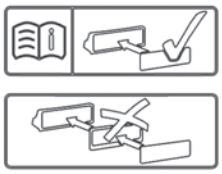

NOTE Malfunctions and system failures due to incorrect installation of the license plate on the front license plate holder

If the license plate is incorrectly installed on the front license plate holder, sensors, cameras or driving and safety systems may malfunction or fail.

Observe the following points when installing the license plate on the front license plate holder:

▶ Install the license plate directly on the license plate holder without advertising media or other holders.

▶ Install the license plate so that it does not protrude from the bottom or side of the license plate adapter.

Declarations of conformity and notes on driving in different countries

Country-specific information for regulatory radio components

Notes on modifications to radio components
Modifications to radio components may result in the operating permit for the relevant radio components being invalidated. The manufacturer of a radio component will not be held responsible for any such modifications.

Notes regarding the crossing of national borders
You must observe the regulatory provisions concerning radio for the country in which you are currently driving when operating the vehicle.

USA:
"This device complies with Part 15 of the FCC Rules. Operation is subject to the following two conditions: (1) This device may not cause harmful interference, and (2) this device must accept any interference received, including interference that may cause undesired operation. Changes or modifications made to this equipment not expressly approved by Mercedes Benz may void the FCC authorization to operate this equipment. Radiofrequency radiation exposure Information: The radiated output power of the device is far below the FCC radio frequency exposure limits. Nevertheless, the device shall be used in such a manner

that the potential for human contact during normal operation is minimized."

"This equipment complies with FCC and ISED radiation exposure limits set forth for an uncontrolled environment. End Users must follow the specific operating instructions for satisfying RF exposure compliance. This transmitter must be at least 20 cm from the user and must not be co-located or operating in conjunction with any other antenna or transmitter."

Canada:
"This device complies with Part 15 of the FCC Rules. Operation is subject to the following two conditions: (1) This device may not cause harmful interference, and (2) This device must accept any interference received including interference that may cause undesired operation. This Class [B] digital apparatus complies with Canadian ICES-003."

"This equipment complies with FCC and ISED radiation exposure limits set forth for an uncontrolled environment. End Users must follow the specific operating instructions for satisfying RF exposure compliance. This transmitter must be at least 20 cm from the user and must not be co-located or operating in conjunction with any other antenna or transmitter."

Canada (French):
"This equipment complies with all requirements stipulated in Part 15 of the FCC rules, as well as with Standard RSS-210 from Innovation, Science and Economic Development Canada. Its operation is subject to the following two conditions: (1) This device must not cause any harmful interference, and (2) this device must accept all interference received, including interference that may cause undesired operation. This Class [B] device complies with Canadian standard NMB-003."

"This equipment complies with FCC and ISED radiation exposure limits established for an uncontrolled environment. End users must follow the specific operating instructions to comply with RF exposure requirements. This transmitter must be positioned at least 20 cm away from the user, and may not be placed in the same location as, or used at the same time as, another antenna or transmitter."

USA: "Wireless charging system for mobile devices (Model: WMI3.5 Wireless Mobile Interface): This Device complies with Part 18 of the FCC Rules."

The name and address of the responsible party is:

Molex CVS

Mizarstraße 3

12529 Schönefeld

Germany

Diagnostics connection

The diagnostics connection is a technical interface in the vehicle. It is used, for example, during repair and maintenance work or for issuing readouts of vehicle data in a specialist workshop. Diagnostic devices should therefore be connected only in a qualified specialist workshop.

WARNING Risk of accident as a result of connecting devices to the diagnostics connection

If you connect devices to the vehicle's diagnostics connection, functioning of vehicle systems and operational safety can become impaired.

- It is recommended for safety reasons that only products which have been approved by an authorized Mercedes-Benz Center be used and connected.

WARNING Risk of accident due to objects in the driver's footwell

Objects in the driver's footwell may impede pedal travel or block a depressed pedal.

This will jeopardize the operating- and road safety of the vehicle.

- Stow all objects in the vehicle securely so that they cannot get into the driver's footwell.
- Make sure that there is always sufficient clearance for the pedals.
- Always install the floor mats securely and as prescribed.
- Do not use loose floor mats and do not place floor mats on top of one another.

NOTE Battery discharging from using devices connected to the diagnostics connection

Using devices at the diagnostics connection drains the battery.

- Check the charge level of the battery.
- If the charge level is low, charge the battery, e.g. by driving a considerable distance.

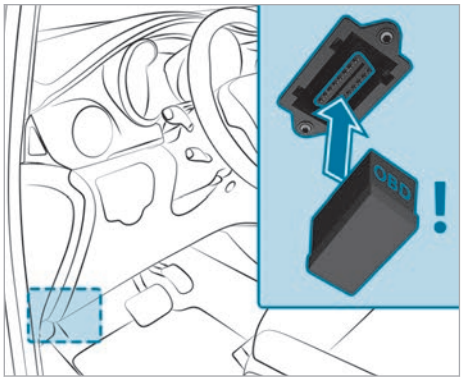

The connection and use of another device in the diagnostics connection can have the following consequences:

- Malfunctions in the vehicle system
- Permanent damage to vehicle components

Please refer to the warranty terms and conditions in this regard.

In addition, connecting equipment to the diagnostics connection may lead to emissions monitoring information being reset, for example. This may lead to the vehicle failing to meet the requirements of the next emissions inspection during the main inspection.

Notes on changes to the engine output

Output increases can:

- Change the emission values.
- Lead to malfunctions.
- Result in consequential damage.

The operating safety of the vehicle is not guaranteed in all situations.

Any tampering with the engine management, for example, in order to increase the vehicle's engine output will lead to the loss of the New Vehicle Limited Warranty and other warranty entitlements.

If you sell the vehicle, inform the buyer of any alterations to the vehicle's engine output. Otherwise, this may constitute a punishable offense under national law.

Qualified specialist workshop

A qualified specialist workshop has the necessary special skills, tools and qualifications to correctly carry out any necessary work on your vehicle. This particularly applies to safety-critical work.

Always have the following work on the vehicle carried out at a qualified specialist workshop:

- Safety-critical work
- Service- and maintenance work
- Repair work
- Modifications as well as installations- and conversions
- Work on electronic components

Mercedes-Benz recommends that you use a Mercedes-Benz service center for this purpose.

Vehicle registration

Mercedes-Benz may ask its service centers to carry out technical inspections on certain vehicles. The quality or safety of the vehicles is improved as a result of the inspection.

Mercedes-Benz can only inform you about vehicle checks if itMercedes-Benz has your registration data.

In the following cases, your vehicle may not be registered to you yet:

- you did not purchase your vehicle at an authorized specialist dealer.
- your vehicle has not yet been inspected at a Mercedes-Benz Service Center.

It is advisable to register your vehicle with a Mercedes-Benz Service Center.

Inform Mercedes-Benz as soon as possible about any change in address or vehicle ownership.

You can do this at a Mercedes-Benz Service Center, for example.

Correct use of the vehicle

If you remove warning stickers, you or others may fail to recognize the dangers. Leave warning stickers in position.

Observe the following information in particular when operating the vehicle:

- Safety notes in these operating instructions
- Technical data for the vehicle
- Traffic rules and regulations of the country in which you are currently located

- Laws pertaining to motor vehicles and safety standards of the country in which you are currently located
- Radio regulations of the country in which you are currently located

Multi-purpose vehicle

WARNING Risk of accident when the center of gravity is too high

The vehicle may start to skid and rollover in the event of sudden steering maneuvers and/or when the vehicle's speed is not adapted to the road conditions.

▶ Always adapt your speed and driving style to the vehicle's driving characteristics and to the prevailing road and weather conditions.

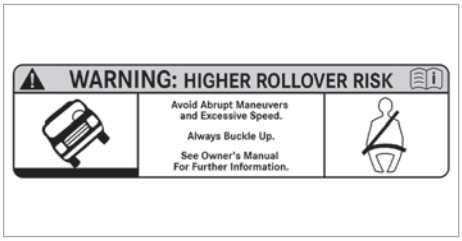

USA

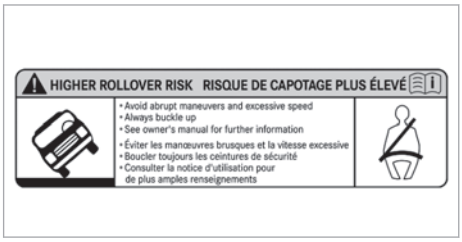

Canada

Utility vehicles have a significantly higher rollover rate than other types of vehicles.

Unsafe operation of the vehicle can result in an accident or rollover, as well as serious or even fatal injuries.

In a rollover crash, an unbelted person is significantly more likely to die than a person wearing a seat belt.

You and all vehicle occupants should always wear seat belts.

Notes for persons with electronic medical aids

Mercedes-Benz AG cannot, despite carefully developing vehicle systems, completely rule out the interaction of vehicle systems with electronic medical aids such as cardiac pacemakers.

In addition, there are components built into the vehicle that, regardless of the operating status of your vehicle, can generate magnetic fields on a par with permanent magnets. These fields can be found, for example, in the area around the multimedia and sound system or also in the seating area, depending on the vehicle equipment.

For this reason, the following can occur in isolated cases, depending on the aids used:

- Medical aids malfunctioning
- Adverse health effects

Observe the notes and warnings of the manufacturer of the medical aids; if in doubt, contact the device manufacturer and/or your doctor. If there is continuing uncertainty concerning the possibility of medical aids malfunctioning, Mercedes-Benz AG recommends using only few electrical vehicle systems and/or maintaining a distance from the components.

Only have repairs and maintenance work in the area of the following components carried out at a qualified specialist workshop:

- Vehicle components carrying live voltage
- Transmission antenna
- Multimedia system and sound system

If you have any queries or suggestions, consult a qualified specialist workshop.

Problems with your vehicle

If you experience a problem with your vehicle, particularly one that you believe may affect vehicle safety, we urge you to contact an authorized Mercedes-Benz Center immediately to have the problem diagnosed and rectified.

If the problem is not resolved to your satisfaction there, please contact an authorized Mercedes-Benz Center again or write to one of the following addresses.

In the USA:

Daimler VANS USA, LLC

Customer Assistance Center

One Mercedes-Benz Drive

Sandy Springs, GA 30328

In Canada:

Mercedes-Benz Canada, Inc.

Customer Assistance Center

2680 Matheson Blvd E, Suite 400

Mississauga, Ontario L4W 0A5

"Reporting safety defects"

USA only:
The following text is published as required of manufacturers under Title 49, Code of U.S. Federal Regulations, Part 575 pursuant to the “National Traffic and Motor Vehicle Safety Act of 1966”.

If you believe that your vehicle has a defect which could cause a crash or could cause injury or death, you should immediately inform the National Highway Traffic Safety Administration (NHTSA) in addition to notifying Daimler VANS USA, LLC.

If NHTSA receives similar complaints, it may open an investigation, and if it finds that a safety defect exists in a group of vehicles, it may order a recall and remedy campaign. However, NHTSA cannot become involved in individual problems between you, your dealer, or Daimler VANS USA, LLC.

To contact NHTSA, you may call the Vehicle Safety Hotline toll-free at 1-888-327-4236 (TTY: 1-800-424-9153) ; go to https://www.nhtsa.gov; or write to: Administrator, NHTSA, 400 Seventh Street, SW., Washington, DC 20590, USA.

For further information on vehicle safety, go to: https://www.nhtsa.gov

Canada only:
The following text is published as required of manufacturers under subsection 18.4 (4) of the Motor Vehicle Safety Regulations.

If you believe that your vehicle has a defect which could cause a crash or could cause injury or death, you should immediately inform Transport Canada in addition to notifying Mercedes-Benz Canada Inc.

If Transport Canada received similar complaints, it may open an investigation, and if it finds that a safety defect exists in a group of vehicles, it may order a recall and remedy campaign. However, Transport Canada cannot become involved in individual problems between you, your dealer, or Mercedes-Benz Canada Inc.

To contact Transport Canada, you may call the Defect Investigations and Recalls Division toll-free in Canada at 1-800-333-0510 or 819-994-3328 in the Gatineau-Ottawa area or internationally; may also go to the following websites for more information:

- English: www.tc.gc.ca/recalls
- French: www.tc.gc.ca/rappels

Limited Warranty

! **NOTE** Damage to the vehicle arising from violation of these operating instructions.

Damage to the vehicle can arise from violation of these operating instructions.

Such damage is not covered by either the Limited Warranty or the new or used-vehicle warranty.

▶ Observe the instructions in these operating instructions on proper operation of your vehicle as well as regarding possible vehicle damage.

QR codes for rescue card

The QR code stickers are affixed to the B-pillars on the driver's and front passenger sides. In the event of an accident, emergency services can use the QR code to quickly determine the corresponding rescue card for your vehicle. The current rescue card contains the most important information about your vehicle (e.g. the routing of the electric lines) in compact form.

You can find further information at: https://rk.mb-qr.com/de/

Data storage

Data processing in the vehicle

Electronic control units
Electronic control units are installed in your vehicle. Control units process data they receive from vehicle sensors, forexample, generate themselves or exchange between themselves. Some control units are required for the safe operation of your vehicle. For example, some assist you when driving, suchas driver assistance systems, while others enable functions serving comfort or infotainment.

The following provides you with general information regarding data processing in the vehicle. Additional information regarding which data in your vehicle is collected, saved and transmitted to third parties and for what purpose can be found in

the information directly related to the functional characteristics in question in the respective Operator's Manual. This information is available both online and digitally, depending on the vehicle's equipment.

Personal data
A unique vehicle identification number identifies every vehicle. Depending on the country, this vehicle identification number can be used by, forexample, governmental authorities to determine the owner's identity. There are other possibilities for using data collected from the vehicle to identify the owner or driver, suchas the license plate number.

Therefore, data generated or processed by control units may be attributable to a person or, under certain conditions, become attributable to a person. Depending on which vehicle data are available, it may be possible to make inferences about, forexample, your driving behaviour, location, route or use patterns.

Legal requirements regarding the disclosure of data
If legally required to do so, manufacturers are legally obliged on a case-by-case basis to provide data stored by the manufacturer to governmental entities, upon request and to the extent required. Forexample, this may come into effect during the investigation of a criminal offense.

Governmental entities are themselves authorised to read out data from the vehicle in individual cases and within the applicable legal framework. Following an accident, information that can help with an investigation can be taken from the air bag control unit, forexample.

Operational data in the vehicle
Data processed by control units for operation of the vehicle.

This includes the following data, forexample:

- Vehicle status information suchas the speed, longitudinal acceleration, lateral acceleration, number of wheel revolutions or the fastened seat belts display
- Ambient conditions, suchas temperature, rain sensor or distance sensor

Generally, these are short-term data and will not be stored beyond the period of operation, and is processed only within the vehicle itself. Control units, forexample vehicle keys, often contain data memories. Their use permits the temporary or permanent documentation of technical information regarding the vehicle's operating state, component loads, maintenance requirements and technical events or malfunctions.

Depending on the technical equipment, the following data are stored:

- Operating status of system components, suchas fill levels, tire pressure or battery status
- Malfunctions or defects in important system components, suchas lights or brakes
- System reactions in special driving situations, suchas air bag deployment or the intervention of stability control systems
- Information on events leading to vehicle damage

In certain cases, storing data that would have otherwise been temporary may be required. This may be the case if the vehicle has detected a malfunction, forexample.

If you use services suchas repair services and maintenance work, stored operational data and the vehicle identification number can be read out and used as required. They can be read out from the vehicle by service network employees, suchas those working for workshops, manufacturers or third parties (e.g. breakdown services). The same applies for warranty claims and quality assurance measures.

In general, the readout is performed via the legally prescribed port for the diagnostics connection in the vehicle. The operating data read out documents the vehicle's or individual components' technical condition and help to diagnose faults, ensure compliance with warranty obligations and bring about improvements in quality. To that end, this data, and in particular information pertaining to component loads, technical events, malfunctions and other faults may be transmitted along with the vehicle identification number to the manufacturer. Furthermore, the manufacturer is subject to product liability. For this reason, the manufacturer also uses operational data from the vehicle, forexample, for recalls. These data can also be used to examine the customer's warranty and legal guarantee claims.

Fault memories in the vehicle can be reset by a service outlet or at your request as part of repair or maintenance work.

Functions serving comfort and infotainment
You can store the vehicle's settings for comfort and customisations, and can change or reset them at any time.

Depending on the vehicle equipment, this includes the following settings, forexample:

- Seat and steering wheel positions
- Suspension tuning and climate control settings
- Customisation settings, suchas interior lighting

Depending on the selected equipment, you can import data into vehicle infotainment functions yourself.

Depending on the vehicle equipment, this includes the following data, forexample:

- Multimedia data, suchas music, films or photos for playback in an integrated multimedia system
- address book data for use in connection with an integrated hands-free system or an integrated navigation system
- entered navigation destinations
- data for the use of Internet services

These data for functions serving comfort and infotainment may be saved locally in the vehicle or on a device connected to the vehicle, suchas a smartphone, USB flash drive or MP3 player. Data that you have entered yourself can be deleted at any time.

These data are transmitted only from the vehicle to third parties at your request. This applies in particular when using online services from your own selected settings.

Smartphone integration (e.g. Android Auto or Apple CarPlay®)

If your vehicle is equipped accordingly, you can connect your smartphone or another mobile end device to the vehicle. You can then control them through the control elements integrated into the vehicle. Images and audio from the smartphone can be relayed through the multimedia system. Certain information is simultaneously transferred to your smartphone. Depending on the type of integration, thisincludes position data, day/night mode and other general vehicle statuses. For more information, please consult the Operator's Manual for the vehicle or in the infotainment system.

This integration allows the use of selected smartphone apps, suchas navigation or music player apps. There is no further interaction between the smartphone and the vehicle; in particular effective access to vehicle data. The type of additional data processing is determined by the provider of the app being used. Permissible settings, if any, will depend on the specific app and your smartphone's operating system.

Online services

Wireless network connection

If your vehicle has a wireless network connection, data can be exchanged between your vehicle and other systems. The wireless network connection is made possible by the vehicle's own transmitter and receiver or by a mobile end device that you have brought into the vehicle, forexample, a smartphone. Online functions can be used via this wireless network connection. This includes online services and applications/apps provided to you by the manufacturer or by other providers.

Manufacturer's own services

Regarding the manufacturer's online services, the individual functions are described by the manufacturer in a suitable place, forexample, in the Operator's Manual or on the manufacturer's website, where the relevant data protection information is also given. Personal identification data may be used to provide online services. Data is exchanged via a secure connection, e.g. the manufacturer's designated IT systems. Any personal data which are collected, processed and used, other than for the provision of services, is done so exclusively on the basis of legal permission. This is the case, forexample, for a legally prescribed emergency call system, a contractual agreement or when consent has been given.

You can have services and functions, some of which are subject to a fee, activated or deactivated. This excludes legally prescribed functions and services, suchas an emergency call system.

Services of third parties

If you use online services from other providers (third parties), these services are the responsibility of the provider in question and subject to that provider's data protection conditions and terms of use. As a general rule, the manufacturer has no influence on the content exchanged.

For this reason, when services are provided by third parties, please ask the service provider in question for information about the type, extent and purpose of the collection and use of personal data.

Onboard Logic Unit (OLU)

The Onboard Logic Unit (OLU) is available to commercial customers.

It contains control units, including antennas for connection via wireless networks, that permit the

exchange of data between your vehicle and other systems. The control units can be used in conjunction with service provided by a third party. Under certaincircumstances, these services may alter the basic configuration of the vehicle and could affect the performance of certain vehicle functions.

For further information about specific services, read the Operator's Manual of the third-party provider. For further information about the Onboard Logic Unit, consult an authorized Mercedes-Benz Center.

If you, yourself, do not own and are not responsible for the vehicle, you may notknow the current status of the Onboard Logic Unit. For further information concerning the services which are currently active, including any data which may be being processed as defined by the GDPR, please contact the person responsible for the vehicle.

Data protection rights

Depending on the country, the equipment and functions of your vehicle, and the services and service offerings used, you are entitled to different data protection rights. Further information on data protection and your data protection rights can either be found on the manufacturer's website or you will receive this information as part of the various services and service offers. There, you will also find the contact information for the manufacturer and its data protection officer.

At a workshop, for example, with the support of a specialist and possibly for a fee, you can have data read out which is stored only locally in the vehicle.

Event Data Recorders

USA only:

This vehicle is equipped with an event data recorder (EDR). The main purpose of an EDR is to record, in certain crash or near crash-like situations, such as an air bag deployment or hitting a road obstacle, data that will assist in understanding how a vehicle’s systems performed. The EDR is designed to record data related to vehicle dynamics and safety systems for a short period of time, typically 30 seconds or less.

The EDR in this vehicle is designed to record such data as:

- How various systems in your vehicle were operating;
- Whether or not the driver and passenger safety belts were buckled/fastened;
- How far (if at all) the driver was depressing the accelerator and/or brake pedal; and,
- How fast the vehicle was traveling.

These data can help provide a better understanding of the circumstances in which crashes and injuries occur. NOTE: EDR data are recorded by your vehicle only if a non-trivial crash situation occurs; no data are recorded by the EDR under normal driving conditions and no personal data (e.g., name, gender, age, and crash location) are recorded. However, other parties, such as law enforcement could combine the EDR data with the type of personally identifying data routinely acquired during a crash investigation.

Access to the vehicle and/or the EDR is needed to read data that is recorded by an EDR, and special equipment is required. In addition to the vehicle manufacturer, other parties that have the special equipment, such as law enforcement, can read the information by accessing the vehicle or the EDR.

EDR data may be used in civil and criminal matters as a tool in accident reconstruction, accident claims, and vehicle safety. Since the Crash Data Retrieval CDR tool that is used to extract data from the EDR is commercially available, Daimler VANS USA, LLC („DVUSA“) expressly disclaims any and all liability arising from the extraction of this information by unauthorized Mercedes-Benz personnel.

MBV will not share EDR data with others without the consent of the vehicle owners or, if the vehicle is leased, without the consent of the lessee. Exceptions to this representation include responses to subpoenas by law enforcement; by federal, state or local government; in connection with or arising out of litigation involving MBV or its subsidiaries and affiliates; or, as required by law.

Warning: The EDR is a component of the Restraint System Module. Tampering with, altering, modifying or removing the EDR component may result in a malfunction of the Restraint System Module and other systems.

State laws or regulations regarding EDRs that conflict with federal regulation are pre\-empted. This means that in the event of such conflict, the federal regulation governs. As of Dec 2016, 17 states have enacted laws relating to EDRs.

Copyright

Free and open source software

Information on licenses for free and open-source software used in your vehicle can be found on

the data storage medium in your vehicle document wallet and with latest updates on the following website:

https://www.mercedes-benz.com/opensource

Registered trademarks

- Bluetooth® is a registered trademark of Bluetooth SIG Inc.
- DTS™ is a registered trademark of DTS, Inc.
- Dolby® and MLP™ are registered trademarks of DOLBY Laboratories.
- ESP® and PRE-SAFE® are registered trademarks of Mercedes-Benz Group AG.
- HomeLink® is a registered trademark of Gentex Corporation.
- iPod® and iTunes® are registered trademarks of Apple Inc.
- Burmester® is a registered trademark of Burmester Audiosysteme GmbH.
- Microsoft® and Windows Media® are registered trademarks of Microsoft Corporation.
- SiriusXM® is a registered trademark of Sirius XM Radio Inc.
- HD Radio™ is a registered trademark of iBiquity Digital Corporation.
- Gracenote® is a registered trademark of Gracenote, Inc.
- ZAGAT Survey® and related brands are registered trademarks of Zagat Survey, LLC.

Brief overview of most important points

Basic information

Make sure that the following prerequisites in particular have been met, so that the components of the restraint system are able to provide the intended level of protection:

- Sit correctly (→ page 31).
- Fasten the seat belt correctly (→ page 32).
  - Function of the [ ] seat belt warning lamp (→ page 34).
- The restraint system warning lamp [ ] has gone out after the self-test (→ page 34).

For clear understanding

The chapter "Occupant safety" includes information on equipment, functions and behaviors that contribute directly to safety of vehicle occupants.

The information is structured as follows:

- **The most important information in brief:** in this chapter, you are provided with an overview of the relationship between the restraint system and the correct behavior of all vehicle occupants.
- **Specific information:** in further sections of the chapter "Occupant safety", you can find specific information on the equipment and functions of the restraint system.
- **Keyword directory:** you can also find certain subjects in this Operator's Manual using the keyword directory.

Information on the following subjects, among others, is not provided in the chapter "Occupant safety":

- Children in the vehicle (→ page 39)
- Driving and driving safety systems (→ page 145)
- Stowage areas (→ page 215)

Defining generic terms clearly

The following generic terms are used in this Operator's Manual:

- **Occupant safety:** comprises the components and system functions which help to minimize, as much as possible, the stresses on and consequences for vehicle occupants during an accident.
- **Restraint system:** comprises those components which, along with the vehicle structure, help prevent vehicle occupants from potentially coming into contact with parts of the vehicle interior. The seat belts and airbags, for example, are components of the restraint system.
- **Child restraint system:** you can find all information on this subject in the chapter "Children in the vehicle" (→ page 39).

Be diligent

For the components of the restraint system to provide the intended level of protection, it is essential that you are seated correctly and that the seat belt is correctly secured.

Bear in mind that negligence concerning your seating position and fastening the seat belt can have serious consequences. Be diligent and make sure that all vehicle occupants are sitting correctly and have fastened their seat belts properly before starting every journey.

Information on the correct seat position

The seat position must be correct in order for the components of the restraint system to provide the intended level of protection.

The seat position influences both the protection provided by the seat belt and the additional protection provided by the air bag.

A correct seat position in which the seat is nearly perfectly upright and a correctly fastened seat belt reduce the risks posed by the air bag when it is deployed.

> ⚠ **WARNING** Risk of injury or death due to an incorrect seat position
>
> If you deviate from the correct seat position, the air bag cannot provide its intended protective function.
>
> Each vehicle occupant must make sure of the following.
>
> ▶ Put the seat in the correct position.
>
> ▶ Fasten seat belts correctly.
>
> ▶ Observe the following information.

In order for the restraint system to provide the intended level of protection, observe the following information:

- Before starting your journey, adjust your seat correctly (→ page 68).

  When doing so, make sure you are able to fasten your seat belt correctly. The shoulder belt

strap must be routed forward from the seat belt outlet over the center of your shoulder.

- Keep your distance from the air bags, especially the front air bags. Set the driver's seat and front passenger seat as far back as possible while making sure the seat belt is fastened correctly.
- If persons are sitting on the rear passenger compartment seats, vehicle occupants should maintain a sufficient distance to the parts of the vehicle interior in front of them.
- Make sure there are no people, animals or objects between the vehicle occupants and an air bag.
- If you are the driver, observe the following information on the correct position of the driver's seat (→ page 68).

  Only hold the steering wheel by the steering wheel rim. This allows the driver's air bag to fully deploy.

  During pregnancy in particular, it is important to ensure the greatest possible distance from the steering wheel due to the change in the mother's stature and the unborn child.
- Assume a nearly upright sitting posture, with your buttocks positioned as far back as possible in the gap between the seat cushion and the seat backrest.

  Your back must rest as flatly and as firmly as possible against the seat backrest.
- While driving, do not lean forward and do not lean against the door or side window. You may otherwise be in the deployment area of the air bags.
- Sit with your feet resting on the floor, if possible. Your thighs are slightly supported by the seat cushion.

  Do not put your feet on the cockpit, forexample. Your feet may otherwise be in the deployment area of the air bag.
- Fasten the seat belt correctly.

Notes on wearing the seat belt correctly

Always fasten your seat belt correctly before starting a journey. Only a seat belt which is worn correctly can provide the intended level of protection.

WARNING Risk of injury or death due to incorrectly fastened seat belt

If the seat belt is not worn correctly, it cannot perform its intended protective function.

In addition, an incorrectly fastened seat belt can also cause injuries, for example, in the event of an accident or when braking or changing direction suddenly.

▶ Always ensure that all vehicle occupants have their seat belts fastened correctly and are sitting properly.

WARNING Risk of injury or death when additional restraint systems are not used for persons with a smaller stature

Persons under 5 ft (1.50 m) tall cannot wear the seat belt correctly without a suitable additional restraint system.

▶ Always secure persons under 5 ft (1.50 m) tall in a suitable restraint system.

Each vehicle occupant must observe the following notes in particular:

- The seat belt must not be twisted.
- The shoulder belt strap must be routed forward from the seat belt outlet over the center of your shoulder.
- The shoulder belt strap should neither touch your neck nor be routed under your arm or behind your back.
- The lap belt must be routed as low down across the hips as possible.

  In addition, push the lap belt down as far as possible across your hips and pull tight with the shoulder belt strap. Never route the lap belt across your abdomen.
- Once tightened, the shoulder belt strap and lap belt must sit snugly against the body.
- During pregnancy in particular, the instructions for wearing the seat belt correctly must be followed diligently due to the change in the mother's stature and the unborn child (→ page 33).
- Avoid wearing bulky clothing, e.g.a winter coat.
- Never route the seat belt across sharp, pointed, abrasive or fragile objects.

- Only one person should use each seat belt at any one time.
- Never secure objects with a seat belt if the seat belt is being used by one of the vehicle's occupants.

  Also ensure that no objects, e.g.cushions, are ever placed between a person and the seat.

Wearing a seat belt during pregnancy

Be diligent

Observe the following instructions diligently, particularly when pregnant due to the change in stature and the unborn child:

- Correct seating position and posture
- Wear the seat belt correctly (→ page 32)

The correct seat position with a nearly upright sitting posture and a correctly fastened seat belt reduce the risks for the mother and unborn child in the event of an accident.

Particularly when pregnant maintain as large a distance as possible between your stomach and the steering wheel due to the change in your stature and the unborn child.

If you cannot ensure sufficient distance from the steering wheel for safe operation of the vehicle, another person should drive the vehicle.

ⓘ Mercedes-Benz recommends that you seek professional advice, e.g. from a doctor, regarding the possible risks of driving a vehicle when pregnant.

Wearing a seat belt

When pregnant observe the following instructions in particular:

- Push the lap belt down as far as possible across your hips and pull it tight with the shoulder belt strap. Never route the lap belt across your stomach when pregnant.
- The shoulder strap should run along the side of your stomach when pregnant.
- Never place objects suchas cushions between a person and the seat belt.

Fastening and adjusting seat belts

The seat belt retractor locks if the seat belt is pulled quickly or sharply. The seat belt strap cannot be pulled out any further.

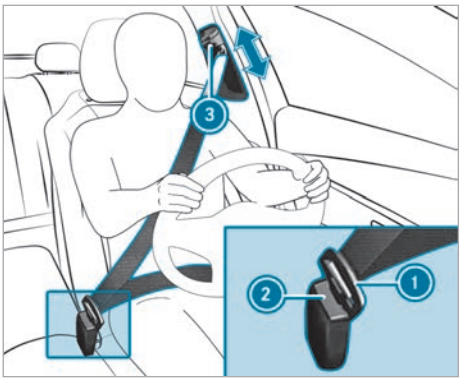

▶ Always engage the seat belt tongue ① of the seat belt into the seat belt buckle ② of the corresponding seat.

▶ **To adjust the seat belt height:** press the button ③ on the seat belt outlet and slide the seat belt outlet to the desired position.

▶ **To engage the seat belt outlet:** release the button ③ and ensure that the seat belt outlet engages.

! **NOTE** Deployment of components of the restraint system when the front passenger seat is unoccupied and a seat belt is buckled

When the front passenger seat is unoccupied and the seat belt tongue of the seat belt is engaged in the seat belt buckle, components of the restraint system may deploy unnecessarily on the front passenger side, e.g. the Emergency Tensioning Device.

▶ Only buckle the seat belts as intended.

ⓘ Observe the information on the child seat safety feature of the seat belt (→ page 43).

Function of the restraint system warning lamp

When the vehicle is switched on, a self-test is performed, during which the restraint system warning lamp lights up. It goes out no later than a few seconds after the vehicle is started. The components of the restraint system are then functional.

A malfunction has occurred in the restraint system in the following cases:

- The restraint system warning lamp does not light up or lights up continuously when the vehicle is switched on.
- The restraint system warning lamp lights up continuously or repeatedly during a journey.

If components of the restraint system have been deployed, the restraint system warning lamp lights up continuously.

WARNING Risk of injury due to malfunctions in the restraint system

Components in the restraint system may be activated unintentionally or not deploy as planned in an accident.

▶ Have the restraint system checked and repaired immediately at a qualified specialist workshop.

Mercedes-Benz recommends that you have the vehicle towed to a qualified specialist workshop.

Function of the seat belt warning lamp

The seat belt warning lamp in the instrument cluster display reminds you that all vehicle occupants must fasten their seat belts correctly.

The seat belt warning lamp lights up for six seconds each time the vehicle is switched on.

A warning tone may also sound.

After the vehicle is started, the seat belt warning goes out as soon as the driver's and the front passenger's seat belts are fastened.

While driving, the seat belt warning lights up in the following cases:

- if the vehicle's speed is higher than 15 mph (25 km/h) and the driver's or front passenger's seat belt is not fastened
- if the driver or front passenger unfastens their seat belt during the journey

Information on the child restraint system

When installing a child restraint system, observe the notes in "Children in the vehicle" (→ page 39).

Notes on the child restraint system on the front passenger seat

WARNING Risk of injury- or fatal accident if the front passenger airbag is enabled

If the front passenger airbag is enabled, a child on the front passenger seat may be struck by the front passenger airbag during an accident.

▶ NEVER use a rearward facing child restraint on a seat protected by an ACTIVE AIRBAG in front of it, DEATH or SERIOUS INJURY to the CHILD can occur.

In particular, observe the notes on rearward-facing or forward-facing child restraint systems on the front passenger seat (→ page 41).

Information on the automatic functions of the restraint system

Overview of the automatic measures after an accident

Depending on the type and severity of the accident, and depending on the vehicle's equipment, the following measures can be implemented, for example:

- automatic braking (post-collision brake)
- activating the hazard warning lights
- triggering an automatic emergency call (→ page 235)
- switching off the engine

  To restart the vehicle, switch the vehicle off and on again (→ page 113). Depending on the type and severity of the accident, it may possible that the vehicle can no longer be started.
- switching off the fuel supply
- unlocking the vehicle doors
- lowering the front side windows
- switching on the interior lighting

Function of the post-collision brake after an accident

Function of the post-collision brake
Depending on the accident situation, the post-collision brake can minimize the severity of a further collision or even avoid it.

If an accident has been detected, the post-collision brake can implement automatic braking. When the vehicle has come to a standstill, the electric parking brake is automatically applied.

The driver can cancel automatic braking by taking the following actions:

- braking more strongly than automatic braking
- fully depressing the accelerator pedal with force

Purpose and function of the restraint system

Overview of deployment situations (restraint system)

Make sure that the following prerequisites in particular have been met, so that the components of the restraint system are able to provide the intended level of protection:

- Sit correctly (→ page 31).
- Fasten the seat belt correctly (→ page 32).
  - Function of the seat belt warning lamp (→ page 34).
- The restraint system warning lamp [ ] is not on after the self-test (→ page 34).

Depending on the detected deployment situation, the components of the restraint system can be activated or deployed independently of one another:

- Emergency Tensioning Device: frontal impact, rear impact, side impact[1)], overturning, rollover
- Driver's airbag, front passenger airbag: frontal impact
- Side airbag: side impact
- Window airbag: side impact, overturning, rollover, frontal impact

[1)] Only when the vehicle is fitted with a side airbag or window airbag.

The installation location of an airbag is identified by the AIRBAG symbol (→ page 38).

Observe the information on the function of the restraint system (→ page 35).

Information on how the restraint system works

How the restraint system functions depends on severity of the impact detected and the apparent type of accident.

For more information regarding types of accidents, see "Overview of deployment situations" (→ page 35).

The activation thresholds for the components of the restraint system are determined based on the evaluation of the sensor values measured at various points in the vehicle. This process is anticipatory in nature. Triggering/deployment of the components of the restraint system must be implemented in good time at the start of the collision.

Factors which can only be seen and measured subsequent to a collision do not play a decisive role in the deployment of an airbag, nor do they provide an indication of airbag deployment.

The vehicle may be deformed significantly without an airbag being deployed. This would be the case if only parts which are relatively easily deformed are struck, and the rate of vehicle deceleration is not high. Conversely, an airbag may be deployed despite the vehicle suffering only minor deformations. If very rigid vehicle parts are struck, suchas longitudinal members, this could cause the vehicle to decelerate at such a rate as to deploy the airbags.

Depending on the apparent type of accident and the detected deployment situation, seat belt tensioners and/or airbags supplement the protection offered by a correctly worn seat belt.

Vehicles with a front passenger bench seat: the seat belt tensioner on the front passenger seat is triggered whether or not the seat belt tongue is engaged in the seat belt buckle.

When enabled, an airbag can provide additional protection for the respective vehicle occupant.

Possible protection per airbag:

- Driver's airbag, front passenger airbag: head and thorax
- Window airbag: head
- Side airbag: thorax and pelvis

However, no system available today can completely prevent injuries and fatalities in every accident situation. In particular, the seat belt and airbag generally do not protect against objects penetrating the vehicle from the outside. It is also not possible to completely rule out the risk of injury caused by deployment of the airbag.

Mercedes-Benz recommends that you have the vehicle towed to a qualified specialist workshop after an accident. This applies in particular if a seat belt tensioner was triggered or an airbag deployed.

If the seat belt tensioner are triggered or an airbag is deployed, you will hear a bang, and a small amount of powder may also be released:

- The sound of the bang will not generally affect your hearing.
- In general, the powder released is not hazardous to health but may cause short-term breathing difficulties to persons suffering from asthma or other pulmonary conditions.

  Provided it is safe to do so, leave the vehicle immediately or open the window in order to prevent breathing difficulties.

Airbags and pyrotechnic seat belt tensioners contain perchlorate material, which may require special handling or environmental protection measures. National guidelines regarding waste disposal must be observed. In California refer to: https://dtsc.ca.gov/. You can use the search function to find information on perchlorate, forexample.

Information on the limited protection provided by the restraint system

Risk due to the incorrect behavior of vehicle occupants

Every vehicle occupant must make sure of the following in particular:

- They observe the information on the correct seat position (→ page 31).
- There are no heavy, pointed, sharp-edged or fragile objects in the pockets of their clothing. Stow such objects in a suitable place.

WARNING Risk of injury or death due to an incorrect seat position

The seat belt does not offer the intended level of protection if you have not moved the seat backrest to an almost vertical position.

In particular, you could slip beneath the seatbelt and become injured.

- ▶ Adjust the seat properly before beginning your journey.
- ▶ Always ensure that the seat backrest is in an almost vertical position and that the shoulder belt is routed across the center of your shoulder.

Risk from objects in the vehicle interior

Every vehicle occupant must ensure the following in particular:

- Observance of information regarding the correct seat position (→ page 31).
- There are no objects between the seat, door and door pillar (B-pillar).
- There are no hard objects, e.g. coat hangers, hanging on the grab handles or clothes hooks.
- There are no heavy, pointed, sharp-edged or fragile objects in the pockets of clothing. Such objects should be stowed in a suitable place.

Observe the instructions for loading the vehicle when securing objects, luggage or loads (→ page 215).

WARNING Risk of injury or death due to blocked seat belt buckle or seat belt anchorage

Objects next to the front seat that block the seat belt buckle or the moving seat belt anchorage on the front seat impair the function of the Emergency Tensioning Devices.

- ▶ Before starting the journey, make sure that there are no objects around the seat belt buckle or between the front seat and door.

WARNING Risk of injury from objects in the deployment area of an airbag

Objects in the deployment area of an airbag can hinder or prevent the correct deployment of the airbag.

The airbag may then deploy in an uncontrolled manner and may even cause additional injuries to the vehicle occupants by deploying. This may be the case in particular if the airbag is integrated into the seat.

- ▶ Always stow and secure objects correctly.
- ▶ Before commencing your journey, make sure that no objects are stowed in the deployment area of an airbag.

The installation location of an airbag is identified via the AIRBAG symbol (→ page 38).

Risk due to installation of accessories

Do not attach accessories such as mobile navigation devices, mobile phones or cup holders within

the deployment area of an airbag, e.g. by the cockpit, by the door, by the side window or by the side trim.

In addition, no connecting cables, tensioning straps or retaining straps must be routed or attached to the vehicle within the deployment area of an airbag. Always comply with the accessory manufacturer's installation instructions and, in particular, the notes on suitable places for installation.

WARNING Risk of injury or death due to unsuitable protective covers

Unsuitable protective covers mean that air bags can no longer protect vehicle occupants as they are designed to do.

▶ Use only protective covers approved by Mercedes-Benz for the seat in question.

Risk due to pets in the vehicle interior

WARNING Risk of accident and injury due to animals left unsecured or unattended in the vehicle

If you leave animals in the vehicle unattended or unsecured, they could possibly press buttons or switches.

An animal may:

- Activate vehicle equipment and become trapped, for example
- Switch systems on or off and endanger other road users

Unsecured animals may be thrown around in the vehicle in the event of an accident or sudden steering and braking maneuvers and injure vehicle occupants in the process.

▶ Never leave animals in the vehicle unattended.

▶ Always correctly secure animals while driving, e.g. using a suitable animal carrier.

Risk due to modification, damage or wear to the components of the restraint system

WARNING Risk of injury or death due to modifications to the restraint system

Vehicle occupants may no longer be protected as intended if alterations are made to the restraint system.

▶ Never alter the parts of the restraint system.

▶ Never tamper with the wiring or any electronic component parts or their software.

If it is necessary to modify the vehicle to accommodate a person with physical disabilities, contact an authorized Mercedes-Benz Center for details.

USA only: for further information, contact our Customer Assistance Center at 1-800-FOR-MERCedes (1-800-367-6372).

WARNING Risk of injury or death due to damaged or modified seat belts

Seat belts cannot provide protection in the following situations:

- The seat belt is damaged, has been modified, is extremely dirty, bleached or dyed
- The seat belt buckle is damaged or extremely dirty
- Modifications have been made to the Emergency Tensioning Device, seat belt anchorage or seat belt retractor

Seat belts may sustain non-visible damage in an accident, e.g. due to glass splinters.

Modified or damaged seat belts could tear or fail in the event of an accident, for example.

Modified Emergency Tensioning Devices could accidentally trigger or fail to function as intended.

▶ Never modify the seat belt system, for example the seat belt, seat belt buckle, Emergency Tensioning Device, seat belt anchorage and seat belt retractor.

▶ Make sure that the seat belts are undamaged, not worn and clean.

▶ Always have the seat belts checked immediately after an accident at a qualified specialist workshop.

Only use seat belts which have been approved for your vehicle by Mercedes-Benz.

WARNING Risk of injury due to modifications to the cover of an airbag

If you change the cover of an airbag or attach objects, e.g. even stickers, to it, the airbag may no longer function as intended.

▶ Never modify the cover of an airbag.

▶ Do not attach any objects to the cover.

The installation location of an air bag is identified by the air bag symbol (→ page 38).

⚠ **WARNING** Risk of injury due to malfunctioning sensors in the door

The function of the airbags can be impaired due to modifications or incorrect work performed on the doors or door trim, or if the doors are damaged.

▶ Never modify the doors or parts of the doors.

▶ Always have work on the doors or door trim carried out at a qualified specialist workshop.

Risk due to components of the restraint system that have already been deployed

Mercedes-Benz recommends that you have the vehicle towed to a qualified specialist workshop after an accident.

⚠ **WARNING** Risk of burns from hot air bag components

The air bag parts are hot after an air bag has been deployed.

▶ Do not touch the air bag parts.

▶ Have a deployed air bag replaced at a qualified specialist workshop as soon as possible.

⚠ **WARNING** Risk of injury due to deployed airbag

A deployed airbag no longer offers any protection.

▶ Have the vehicle towed to a qualified specialist workshop in order to have the deployed airbag replaced.

Have deployed air bags replaced immediately.

⚠ **WARNING** Risk of injury or death from deployed pyrotechnic Emergency Tensioning Devices

Pyrotechnic Emergency Tensioning Devices that have been deployed are no longer operational and are unable to perform their intended protective function.

▶ Therefore, have deployed pyrotechnic Emergency Tensioning Devices immediately replaced at a qualified specialist workshop.

Seat belts

Unfastening the seat belts

▶ Press the release button on the seat belt buckle and guide the seat belt back with the seat belt tongue.

! **NOTE** Damage caused by trapping the seat belt

If an unused seat belt is not fully retracted, it may become trapped in the door or in the seat mechanism.

▶ Always ensure that an unused seat belt is fully retracted.

Airbags

Overview of air bags

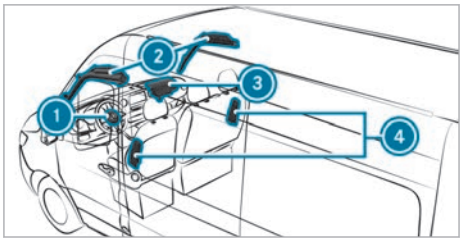

1. Driver's air bag
2. Window curtain air bag
3. Co-driver air bag
4. Side impact air bag

The installation location of an air bag is identified by the AIRBAG symbol.

Observe the information in "Overview of deployment situations" (→ page 35).

Brief overview of most important points

Safely carrying children in the vehicle

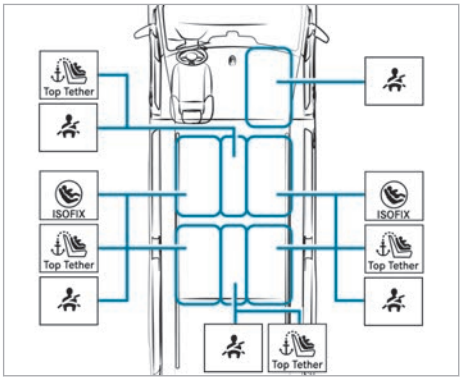

Example: vehicle with 2nd/3rd seat row

Always observe the following when carrying children:

- Never leave children unattended in the vehicle (→ page 40).
- Properly secure children up to a height of 5 ft (1.50 m) or under 12 years of age on the appropriate seat with a suitable and approved child restraint system, and secure infants in a rear passenger compartment-facing child restraint system.
- Observe the child restraint system manufacturer's installation instructions.

Left/right rear passenger compartment seat (preferred seats)

Preferred attachment system:

ISOFIX/LATCH mounting bracket (→ page 43)

and

Also attach Top Tether if available (→ page 44).

Alternative attachment system:

Seat belt on vehicle seat (→ page 45)

Additionally attach Top Tether if recommended by the manufacturer of the child restraint system (→ page 44).

Front passenger seat

Attachment system:

Seat belt on vehicle seat (→ page 45)

Rear passenger compartment center seat

Attachment system:

Seat belt on vehicle seat (→ page 45)

Additionally attach Top Tether if recommended by the manufacturer of the child restraint system (→ page 44).

The following belt-secured child restraint systems within the Universal category are approved: U, UF. Please see the other alternatives for use (→ page 45).

Important safety notes

Basic information

Be diligent

Bear in mind that negligence when securing a child in the child restraint system can have serious consequences. Always be diligent and secure a child carefully before each journey.

Infants and children must never travel sitting on the lap of a vehicle occupant.

To improve protection for children under 12 years of age or less than 5 ft (1.50 m) in height, Mercedes-Benz recommends that you make sure you observe the following information:

- Always secure the child in a child restraint system suitable for this Mercedes-Benz vehicle.
- The child restraint system must be appropriate to the age, weight and size of the child.
- The vehicle seat must be suitable for the child restraint system to be installed:
  - ISOFIX/LATCH mounting bracket (→ page 43)
- The vehicle seat must be suitable for the child restraint system to be installed.

Accident statistics show that children secured on the rear passenger compartment seats are generally safer than children secured on the front seats. For this reason, Mercedes-Benz strongly advises that you install a child restraint system to a rear passenger compartment seat if there are rear passenger compartment seats.

The generic term child restraint system

The generic term child restraint system is used in these Operating Instructions. A child restraint system can include, forexample:

- an infant carrier
- a rear passenger compartment-facing child seat
- a front-facing child seat
- a child booster seat – Mercedes-Benz recommends using a child booster seat **with** a seat backrest and seat belt guide.

Observe laws and regulations

Always observe the legal requirements when using a child restraint system in the vehicle.

Attachment systems for child restraint systems in the vehicle

Only use the following attachment systems for child restraint systems:

- the ISOFIX/LATCH mounting bracket
- the seat belt system of the vehicle
- the Top Tether anchorages

Easy attachment to the ISOFIX/LATCH mounting bracket on the vehicle can reduce the risk of installing the child restraint system incorrectly.

When securing a child with the integrated seat belt of the ISOFIX/LATCH child restraint system, always comply with the permissible gross weight for the child and child restraint system (→ page 43).

A booster seat may be necessary to achieve proper seat belt positioning for children over 40 lbs (18 kg) in weight or until they reach a height where a three-point seat belt can be installed properly without a booster seat.

Mercedes-Benz recommends a child booster seat with a backrest and seat belt guides.

Observe standards for child restraint systems

All child restraint systems must meet the following standards:

- U.S. Federal Motor Vehicle Safety Standards 213
- Canada Motor Vehicle Safety Standards 213

Confirmation that the child restraint system complies with the standards can be found on an information label on the child restraint system. This confirmation can also be found in the installation instructions that are included with the child restraint system.

Important warning notices

Always secure a child restraint system correctly

WARNING Risk of injury or death due to incorrect installation of the child restraint system

The child can then not be protected or restrained as intended.

▶ Be sure to comply with the manufacturer's installation instructions for the child restraint system and its correct use.

▶ Make sure that the entire base of the child restraint system always rests on the sitting surface of the seat.

▶ Never place objects (e.g. cushions) under or behind the child restraint system.

▶ Use child restraint systems only with the original cover designed for them.

▶ Always replace damaged covers with genuine covers.

- Always observe the vehicle-specific information.
  - Installing the ISOFIX/LATCH child restraint system on the rear passenger compartment seat (→ page 43).
  - Securing the child restraint system with the seat belt (→ page 45).
- Observe the warning labels in the vehicle interior and on the child restraint system.

WARNING Risk of injury or death due to unsecured child restraint systems in the vehicle

If the child restraint system is incorrectly mounted or unsecured, it may come loose.

The child can then not be protected or restrained as intended.

Unused child restraint systems could be flung around and hit vehicle occupants.

▶ Always comply with the manufacturer's installation instructions for the child restraint system and its correct use.

- Always fit child restraint systems correctly, even if they are transported in the vehicle unused.

Do not modify the child restraint system

WARNING Risk of injury due to modifications to the child restraint system

The child restraint system can no longer function properly. This poses an increased risk of injury.

- Never modify a child restraint system.
- Only affix accessories which have been specially approved for this child restraint system by the child restraint system's manufacturer.

Only use child restraint systems which are in proper working condition

WARNING Risk of injury or death caused by the use of damaged child restraint systems

Child restraint systems or their retaining systems that have been subjected to stress in an accident may not be able to perform their intended protective function.

It may be the case that the child cannot be properly restrained.

- Always immediately replace child restraint systems that have been damaged or involved in an accident.
- Have the securing systems for the child restraint systems checked at a qualified specialist workshop before installing a child restraint system again.

Avoid direct sunlight

WARNING Risk of burns when the child seat is exposed to direct sunlight

If the child restraint system is exposed to direct sunlight or heat, parts could heat up excessively.

Children could suffer burns from these parts, particularly the metallic parts of the child restraint system.

- Always make sure that the child restraint system is not exposed to direct sunlight.
- Cover the child restraint system with a blanket, for example.
- If the child restraint system has been exposed to direct sunlight, allow it to cool before securing a child into it.
- Never leave children unattended in the vehicle.

Observe when stopping or parking

WARNING Risk of fatalities due to exposure to extreme heat- or cold in the vehicle

If persons – and in particular children – are exposed to solar radiation, or the effects of heat or cold for prolonged periods of time, there is a risk of sustaining injuries or even fatalities!

- Never leave people – especially children – unattended in the vehicle.

WARNING Risk of accident and injury due to children left unattended in the vehicle

If you leave children unattended in the vehicle, they could, in particular:

- open doors, thereby endangering other persons or road users.
- get out and be struck by oncoming traffic.
- operate vehicle equipment and become trapped, for example.

In addition, the children could also set the vehicle in motion by, for example:

- releasing the parking brake.
- changing the gearbox position.
- starting the vehicle.

- Never leave children unattended in the vehicle.
- When leaving the vehicle, always take the key with you and lock the vehicle.
- Keep the key out of reach of children.

Important notes on rearward-facing child restraint systems on the front passenger seat

The front passenger airbag cannot be disabled.

Always fit a rearward-facing child restraint system on a suitable rear seat, but never on the front passenger seat. Observe the manufacturer's

installation and operating instructions for the child restraint system used.

NEVER use a rearward-facing child restraint system on a seat with an ENABLED FRONT airbag. This can result in SERIOUS INJURY or FATALITIES to children.

Always observe the information on the safe transportation of children (→ page 39) .

Securing the child restraint system

Adjusting the seat correctly

When installing a child restraint system on the left or right-hand rear seat, always observe the following:

- Ensure that the child's feet do not touch the front seat. If necessary, move the front seat slightly forward.

If the head restraint of the child restraint system cannot be fully extended when it is installed in the vehicle, this will result in restrictions on the maximum size setting for certain child restraint systems. Observe the child restraint system manufacturer's installation instructions.

ⓘ Contact with the roof when the head restraint is fully extended and locked in place will not result in any restrictions on use.

When installing an ISOFIX/LATCH child restraint system, also observe the following:

- **When using a rearward-facing child restraint system on a rear seat:** adjust the front seat to ensure that it is not touching the child restraint system.
- **When using a front-facing child restraint system with integrated child seat belt:** adjust the head restraint of the respective seat so that it cannot push the child restraint system forward. If necessary, the respective head restraint can be removed. In addition, the seat backrest of the child restraint system must lie as flat as possible against the backrest of the vehicle seat. After the child restraint system has been removed, immediately replace the vehicle head restraint and adjust correctly.
- Do not brace the child restraint system between the roof and the seat surface and/or ensure that it is not installed askew. Where possible, adjust the seat cushion inclination accordingly.
- Adjust the vehicle head restraints so that the child restraint system is not placed under any strain by the head restraint.

When installing a belt-secured child restraint system, also observe the following:

- **When using a rearward-facing child restraint system on a rear seat:** adjust the front seat to ensure that it is not touching the child restraint system.
- Also attach a top tether if available .
- **When using a front-facing child restraint system with integrated child seat belt:** adjust the head restraint of the respective seat so that it cannot push the child restraint system forward. If necessary, the respective head restraint can be removed. In addition, the seat backrest of the child restraint system must lie as flat as possible against the backrest of the vehicle seat. After the child restraint system has been removed, immediately replace the vehicle head restraint and adjust correctly.
- Ensure that the seat backrest of front-facing child restraint system is lying as flat as possible against the backrest of the rear seat.
- Do not brace the child restraint system between the roof and the seat surface and/or ensure that it is not installed askew. Where possible, adjust the seat cushion inclination accordingly.
- Adjust the vehicle head restraints so that the child restraint system is not placed under any strain by the head restraint.
- Ensure that the child's feet do not touch the front seat. If necessary, move the front seat slightly forward.

Depending on the vehicle equipment, always observe the following when installing a belt-secured child restraint system on the front passenger seat:

- **When using a front-facing child restraint system with integrated child seat belt:** remove the head restraint from the respective seat, if possible. After the child restraint system has been removed, immediately replace the head restraint and adjust correctly.
- Ensure that the seat backrest of front-facing child restraint system is lying as flat as possible against the backrest of the front passenger seat.

- Do not brace the child restraint system between the roof and the seat surface and/or ensure that it is not installed askew.
- Adjust the vehicle head restraints so that the child restraint system is not placed under any strain by the head restraint.
- Never place objects (e.g.cushions) under or behind the child restraint system.
- Set the front passenger seat as far back as possible and move the seat into the highest position possible. Always ensure that the shoulder belt strap is correctly routed from the seat belt outlet of the vehicle to the shoulder belt guide on the child restraint system. The shoulder belt strap must be routed forwards from the seat belt outlet and, where possible, downwards to the child restraint system.
- Fully retract the seat cushion length adjustment.
- Set the seat cushion inclination so that the front edge of the seat cushion is in the highest position and the rear edge of the seat cushion is in the lowest position.
- Set the seat backrest to the most vertical position possible.

Activating or deactivating the child seat safety feature of the seat belt

WARNING Risk of injury or death if a seat belt is unfastened while the vehicle is in motion

If the seat belt is released while the vehicle is in motion, the special seat belt retractor is deactivated and the child restraint system is no longer correctly secured. The seat belt is drawn in slightly by the inertia reel and cannot be immediately closed again.

- Stop the vehicle immediately in accordance with the traffic conditions.
- Activate the special seat belt retractor again and correctly secure the child restraint system.

When activated, the child seat safety feature ensures that the seat belts of the front passenger seat do not slacken once the child restraint system is secured.

The seat belts on the following seats are equipped with a child seat safety feature:

- Front passenger seat

Installing a child restraint system

- When installing a child restraint system, always observe the manufacturer's installation and operating instructions for the child restraint system used, as well as the notes in this Operator's Manual.
- Pull the seat belt smoothly from the seat belt outlet.
- Engage the seat belt tongue in the seat belt buckle.

Activating the child seat safety feature

- Extend the seat belt fully and then allow the inertia reel to retract the belt.
  When the child seat safety feature is activated, you should hear a ratcheting sound.
- Push the child restraint system down until the seat belt is tight.

Deactivating the child seat safety feature

- Press the release button of the seat belt buckle.
- Hold the seat belt tongue and guide it back to the seat belt outlet.

Installing an ISOFIX/LATCH child restraint system on the rear seat

WARNING Risk of injury or death if the permissible gross mass of the child and child restraint system together is exceeded.

Too much load may be placed on the LATCH-type (ISOFIX) or iSize child restraint systems and the child may not be restrained correctly in the event of an accident, for example.

- If the child is secured in a LATCH-type (ISOFIX) child restraint system with integrated seat belt, the total mass of the child and child restraint system must not exceed 73 lb (33 kg).

Always comply with the information about the mass of the child restraint system:

- in the installation instructions and Operator's Manual for the child restraint system used
- on a label on the child restraint system, if present

Regularly check continued compliance with the permissible gross mass of the child and child restraint system.

When you install a child restraint system, observe the following:

☑ Always observe the correct use and suitability of the seats for attaching a child restraint system.

ISOFIX/LATCH child seat anchor

☑ Always observe the installation instructions and Operator's Manual for the child restraint system used.

☑ Make sure that the child's feet do not touch the front seat. If necessary, move the front seat slightly forward.

When installing an ISOFIX/LATCH child restraint system, also observe the following:

☑ **When using a weight group 0/0+ baby car seat and a weight group 1 rearward-facing child restraint system on a rear seat:** adjust the rear and/or front seat so that the front seat does not touch the child restraint system.

☑ **When using a weight category I forward-facing child restraint system:** the backrest of the child restraint system must lie as flat as possible against the backrest of the seat.

☑ For certain child restraint systems in weight category II or III, there may be restrictions on the maximum size setting, e.g. owing to possible contact with the roof.

☑ The child restraint system must not be put under strain between the roof and the seat surface and/or be installed facing in the wrong direction.

☑ Do not put the child restraint system under load from the head restraint. Adjust the head restraints as appropriate.

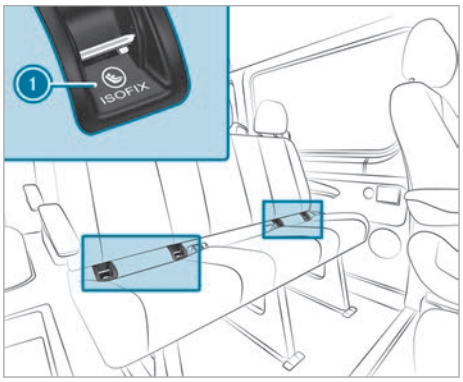

① LATCH-type (ISOFIX) securing ring

Before every journey, make sure that the ISOFIX/LATCH child restraint system is engaged correctly in both mounting brackets in the vehicle.

NOTE Damage to the seat belt for the center seat during installation of the child restraint system

▶ Make sure that the seat belt is not trapped.

▶ Attach the ISOFIX/LATCH child restraint system to both mounting brackets ① in the vehicle.

Securing Top Tether

WARNING Risk of injury due to incorrect attachment of the Top Tether belt

If you attach the Top Tether belt incorrectly, the child restraint system is not properly secured and therefore cannot protect as intended.

▶ Attach the Top Tether hook only to the intended Top Tether anchorage.

If the child restraint system is equipped with a Top Tether belt:

The risk of injury can be reduced by Top Tether. The Top Tether belt enables an additional connection between the child restraint system attached with ISOFIX and the vehicle.

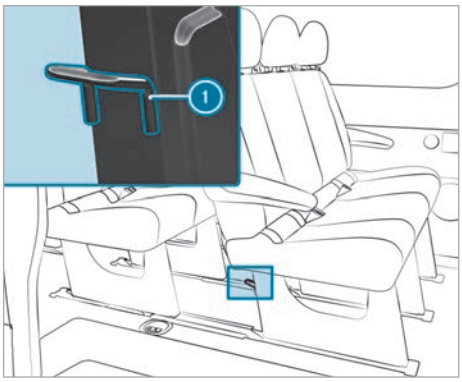

Top Tether anchorages (1) are located on the back of the rear bench seat on the bench seat legs.

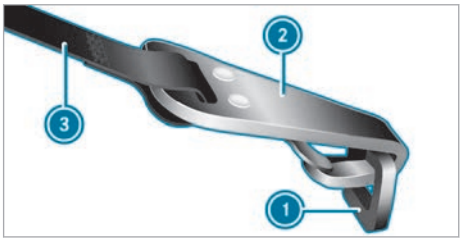

- If necessary, move the head restraint upwards (→ page 79).
- Install the ISOFIX child restraint system with Top Tether. Comply with the child restraint system manufacturer's installation instructions.
- Guide Top Tether belt (3) under the head restraint between the two head restraint bars.
- Hook Top Tether hook (2) into Top Tether anchorage (1) without twisting.
- Tension Top Tether belt (3). Comply with the child restraint system manufacturer's installation instructions.
- If necessary, slide the head restraint downwards (→ page 79). Make sure that you do not interfere with the correct routing of Top Tether belt (3).

Fastening the child restraint system with the seat belt

The seat belts on the following seats are equipped with a child seat safety feature:

- Front passenger seat

When activated, the child seat safety feature ensures that the seat belts of the front passenger seat do not slacken once the child restraint system is secured.

- Fitting the child restraint system.
  The entire base of the child restraint system must always rest on the sitting surface of the seat.
- Always ensure that the shoulder belt strap is correctly routed from the seat belt outlet of the vehicle to the shoulder belt guide on the child restraint system.
  The shoulder belt strap must be routed forwards from the seat belt outlet and, where possible, downwards to the child restraint system.
- If necessary, adjust the seat belt outlet and the front passenger seat as appropriate.

Child safety locks

Activating or deactivating child safety locks for the sliding doors

WARNING Risk of accident and injury due to children left unattended in the vehicle

If you leave children unattended in the vehicle, they could, in particular:

- open doors, thereby endangering other persons or road users.
- get out and be struck by oncoming traffic.
- operate vehicle equipment and become trapped, for example.

In addition, the children could also set the vehicle in motion by, for example:

- releasing the parking brake.
- changing the gearbox position.
- starting the vehicle.

- Never leave children unattended in the vehicle.
- When leaving the vehicle, always take the key with you and lock the vehicle.

▶ Keep the key out of reach of children.

⚠ **WARNING** Risk of fatalities due to exposure to extreme heat- or cold in the vehicle

If persons – and in particular children – are exposed to solar radiation, or the effects of heat or cold for prolonged periods of time, there is a risk of sustaining injuries or even fatalities!

▶ Never leave people – especially children – unattended in the vehicle.

⚠ **WARNING** Risk of accident and injury due to children left unattended in the vehicle

If children are traveling in the vehicle, they could, in particular:

- Open doors, thereby endangering other persons or road users
- Get out and be struck by oncoming traffic
- Operate vehicle equipment and become trapped, for example

▶ Always activate the child safety locks installed if children are traveling in the vehicle.

▶ Never leave children unattended in the vehicle.

▶ When leaving the vehicle, always take the SmartKey with you and lock the vehicle.

The following doors feature child safety locks:

- Sliding doors

The child safety locks on the doors secure each door separately. The doors can no longer be opened from the inside (except the electric sliding door). The door can be opened from the outside when the vehicle is unlocked.

The electric sliding door can be opened any time using the button in the center console.

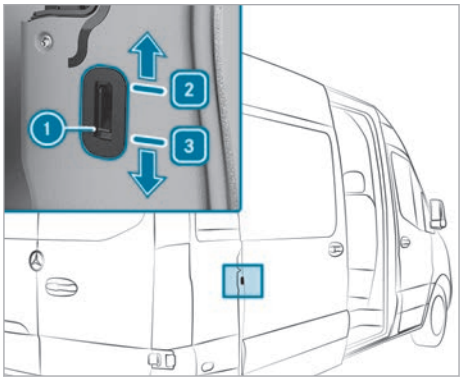

Example: sliding door child safety lock

▶ Slide the child safety lock latch ① into position [2] (secure) or [3] (unlock).

▶ Ensure that the child safety locks are working properly.

Occupant presence reminder

Occupant presence reminder function

The occupant presence reminder can help point out any forgotten children in the rear passenger compartment of the vehicle. It activates automatically if it can be assumed that small children could get in or out of the vehicle if a rear door is opened for a longer period of time before or while the vehicle is switched on.

When the vehicle is switched off after a journey of three minutes or longer, the Do Not Leave People or Animals in the Vehicle message appears on the driver display if the system was automatically activated beforehand.

The system deactivates automatically in the following situations:

- When the rear passenger compartment door is opened after a journey.
- Two minutes after the end of the journey.
- When the vehicle is locked from the outside.

You can switch the function off permanently in the multimedia system (→ page 47). When the system is deactivated, the indicator lamp [OFF] lights up on the driver display.

ⓘ Certain vehicles are not equipped with the occupant presence reminder function. In this case, the option of switching it on and off is not available in the multimedia system.

If you are unsure as to whether the occupant presence reminder function is available in the vehicle, check the option for switching it on and off in the multimedia system.
Persons, and particularly children, should never be left unsupervised in the vehicle.

Switching occupant presence reminder on or off in the multimedia system

Multimedia system:

→ ⌂ ▸▸ Settings ▸▸ Vehicle ▸▸ Occupant Protection

▶ Activate or deactivate the function.

SmartKey

Notes on the key's radio connections

⚠ **DANGER** Risk of fatal injury to persons with medical devices due to electromagnetic radiation when using the start/stop button

Persons with medical devices, e.g. pacemakers or defibrillators:

There is a radio connection between the key and the vehicle.

The function of a medical device can be impaired.

▶ Before operating the vehicle, consult your doctor or the manufacturer of the medical device about any possible effects from such systems.

Detection range of KEYLESS-START function antenna

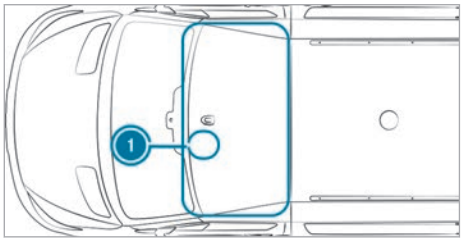

① Position of key holder when the antenna detection range is reduced (→ page 114)

Overview of key functions

⚠ **WARNING** Risk of accident and injury due to children left unattended in the vehicle

If you leave children unattended in the vehicle, they could, in particular:

- open doors, thereby endangering other persons or road users.
- get out and be struck by oncoming traffic.
- operate vehicle equipment and become trapped, for example.

In addition, the children could also set the vehicle in motion by, for example:

- releasing the parking brake.
- changing the gearbox position.
- starting the vehicle.

▶ Never leave children unattended in the vehicle.

▶ When leaving the vehicle, always take the key with you and lock the vehicle.

▶ Keep the key out of reach of children.

! **NOTE** Damage to the SmartKey caused by magnetic fields

▶ Keep the SmartKey away from strong magnetic fields.

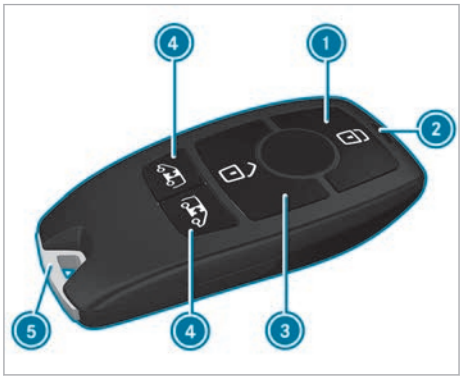

① To lock
② Indicator lamp
③ To unlock
④ To unlock the cargo compartment (sliding doors and rear-end doors) / to unlock and open/close the electric sliding doors
⑤ Emergency key

The key's factory setting enables you to centrally lock and unlock the following components:

- the driver's door and front passenger door
- the sliding doors
- the rear-end doors

ⓘ If you do not open the vehicle within approximately 40 seconds of unlocking, the vehicle will lock again and anti-theft protection will be armed again.

Do not store the key together with electronic devices or metallic objects. This could impair the key's functionality.

ⓘ If the indicator lamp ② does not light up when you press the button [🔓] or [🔒], the battery is discharged.

Replace the key battery (→ page 49).

Activating/deactivating the acoustic locking verification signal

Multimedia system:

→ [⌂] ▸▸ Settings ▸▸ Vehicle ▸▸ Open/Close

▶ Switch the Acoustic Lock on or off.

Changing the unlocking settings

The key has the following adjustable unlocking functions:

- unlocking the vehicle centrally
- unlocking the driver's door (vehicles without partition or with cab)
- unlocking the driver's door and front passenger door (vehicles with partition)

▶ **To switch between settings:** press and hold the buttons [🔓] and [🔒] at the same time for approximately six seconds until the indicator lamp flashes twice.

▶ **To unlock the vehicle centrally when the unlocking function is selected for the driver's door or the driver's and front passenger door:** press the [🔓] button a second time.

Reducing energy consumption of the key

Deactivate key function

If you do not use the vehicle or a key for an extended period of time, you can also deactivate the function of the key to reduce energy consumption of the respective key.

▶ Press and hold the key button [🔒].

▶ With the key button [🔒] pressed, immediately press the key button [🔓] twice in quick succession.
The indicator lamp of the key lights up once briefly and then again for a longer period.

Activate the key function

▶ Press any button on the key.

ⓘ If the key in the storage compartment is in emergency operation mode for start-up, the key function is activated automatically (→ page 114).

Removing and inserting the emergency key

Removing

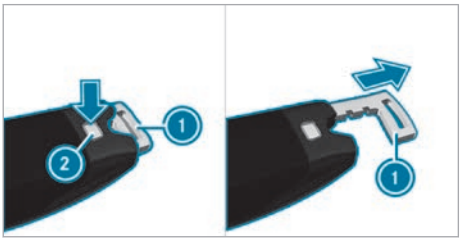

▶ Press the release knob ②.
The emergency key ① is pushed out slightly.

▶ Pull the emergency key ① out completely.

Inserting

▶ Press the release knob ②.

▶ Slide the emergency key ① in completely until it engages .

ⓘ The Anti-Theft Alarm system (ATA) is triggered when you unlock and open the vehicle using the emergency key (→ page 65).

Replacing the key battery

⚠ **DANGER** Risk of fatal injury due to swallowing batteries

Batteries contain toxic and corrosive substances. If batteries are swallowed or otherwise enter the body, severe internal burns can occur within two hours.

There is a risk of fatal injury!

▶ Keep the batteries out of the reach of children.

▶ If the lid and/or the battery compartment do not close securely, stop using the key and keep it away from children.

▶ If batteries are swallowed or otherwise enter the body, seek immediate medical attention.

ENVIRONMENTAL NOTE Environmental damage due to improper disposal of batteries

Batteries contain pollutants. It is illegal to dispose of them with the household rubbish.

▶ Dispose of batteries in an environmentally responsible manner. Take discharged batteries to a qualified specialist workshop or to a collection point for used batteries.

Requirements:

- You need a CR 2032 lithium cell battery (3 V).

Mercedes-Benz recommends that you have the battery replaced by a qualified specialist workshop.

▶ Remove the emergency key (→ page 49).

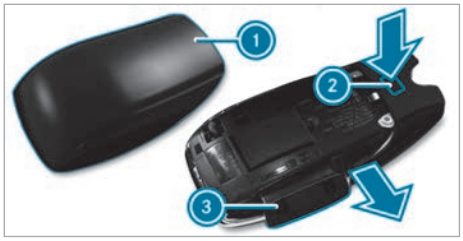

Example image

▶ Press the release knob ② all the way down and slide open the cover ①.

▶ Pull out the battery compartment ③ and remove the flat battery.

▶ Insert the new battery into the battery compartment ③. Observe the positive terminal marking in the battery compartment and on the battery.

▶ Insert the battery compartment ③.

▶ Re-attach the cover ① and push it closed until it engages.

▶ Slide the emergency key in completely until it engages (→ page 49).

Rectifying problems with the key

You can no longer lock or unlock the vehicle.

Possible causes:

- The key battery is at low capacity or is flat.

▶ Check the battery via the indicator lamp (→ page 48).

▶ Replace the key battery as required (→ page 49).

▶ Use the replacement key.

▶ Use the emergency key to lock and unlock the vehicle (→ page 53).

▶ Have the key checked at a qualified specialist workshop.

There is interference from a powerful radio signal source.

Possible causes if the function of the key is impaired:

- high voltage power lines
- mobile phones
- electronic devices (notebooks, tablets)
- shielding due to metal objects or induction loops for electrical gate systems or automatic barriers

▶ Ensure that there is sufficient distance between the key and the potential source of interference.

You have lost a key.

▶ Have the key deactivated at a qualified specialist workshop.

▶ If necessary, have the locks changed as well.

Doors

Unlocking and opening the door from inside

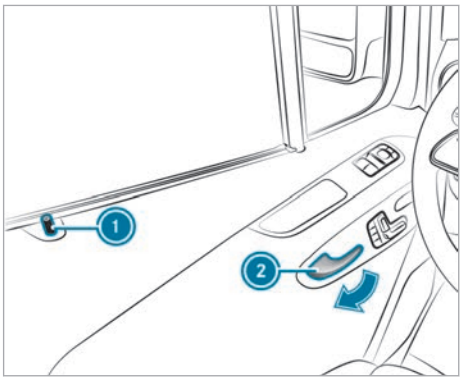

▶ **To unlock and open the front door:** pull the door handle (2).
The safety pin (1) pops up when the door is unlocked.

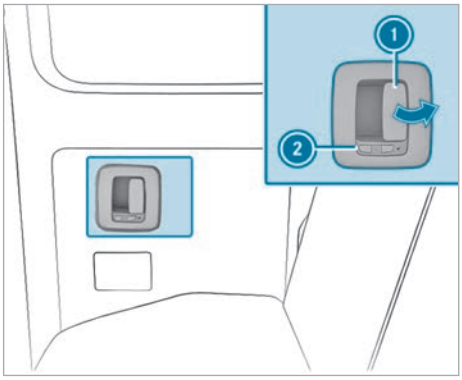

The [🔓] symbol indicates that the rear door is unlocked.

▶ **To unlock and open the rear door:** Pull the release lever (1) and open the rear door.
When the door unlocks, the catch (2) moves forward.
The [🔓] symbol is visible.

▶ **To close:** Pull the rear door closed using the door handle.

▶ **To lock:** slide back the catch (2).
The [🔒] symbol is visible.

Centrally locking and unlocking the door from the inside

⚠ **WARNING** Risk of accident and injury due to children left unattended in the vehicle

If you leave children unattended in the vehicle, they could, in particular:

- open doors, thereby endangering other persons or road users.
- get out and be struck by oncoming traffic.
- operate vehicle equipment and become trapped, for example.

In addition, the children could also set the vehicle in motion by, for example:

- releasing the parking brake.
- changing the gearbox position.
- starting the vehicle.

▶ Never leave children unattended in the vehicle.

▶ When leaving the vehicle, always take the key with you and lock the vehicle.

▶ Keep the key out of reach of children.

⚠ **WARNING** Risk of fatalities due to exposure to extreme heat- or cold in the vehicle

If persons – and in particular children – are exposed to solar radiation, or the effects of heat or cold for prolonged periods of time, there is a risk of sustaining injuries or even fatalities!

▶ Never leave people – especially children – unattended in the vehicle.

You can use the central locking buttons to centrally lock and unlock the entire vehicle from the inside.

The central locking buttons are located in the driver's and front passenger doors.

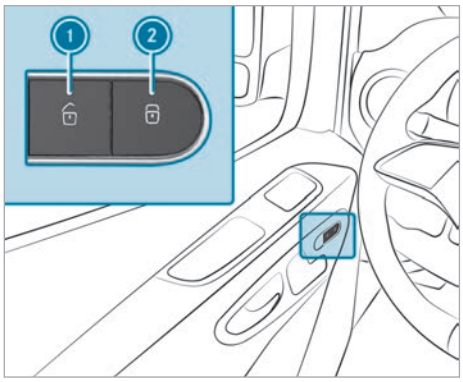

Central locking buttons (vehicles with electrically adjustable front seats)

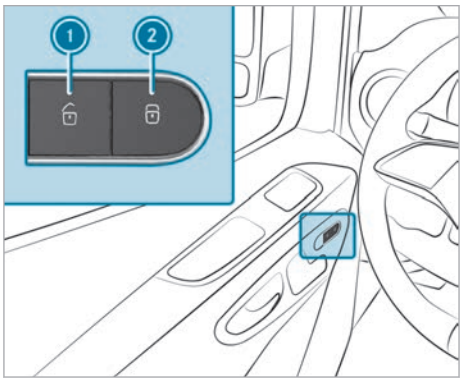

Central locking buttons (vehicles with electrically adjustable front seats)

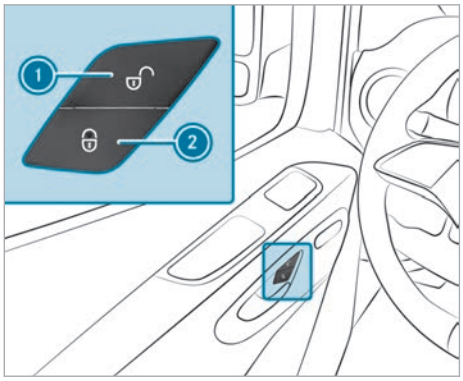

Central locking buttons (vehicles with manually adjustable front seats)

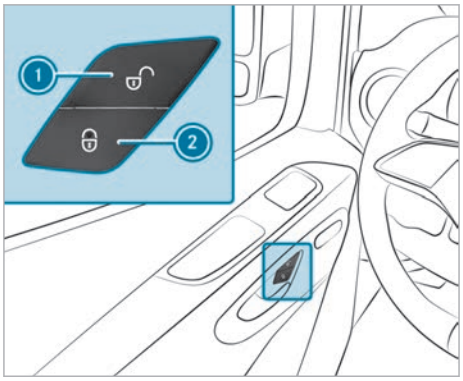

Central locking buttons (vehicles with manually adjustable front seats)

- **To unlock:** with the doors closed, press the button (1).
- **To lock:** with the doors closed, press the button (2).

Activating/deactivating the automatic lock

Requirements:

- The power supply or the vehicle has been switched on.
- The doors are closed.

When the automatic lock is activated and the vehicle is traveling at a speed above 9 mph (15 km/h), the vehicle will be locked automatically.

If the vehicle is being tow started, push-started or tested on a roller dynamometer, there is a risk of being locked out when the function is activated.

- **To activate:** press and hold the button (2) until you hear an acoustic signal.
- **To deactivate:** press and hold the button (1) until you hear an acoustic signal.

Activating or deactivating the automatic locking function via the multimedia system

Multimedia system:

→ [⌂] ▸▸ Settings ▸▸ Vehicle ▸▸ Open/Close

ⓘ The vehicle is locked automatically when the vehicle is switched on and the wheels are turning faster than walking pace.

▶ Activate or deactivate Automatic Door Lock.

In the following situations, there is a danger of being locked out when the function is activated:

- The vehicle is being towed or pushed.
- The vehicle is being tested on a roller dynamometer.

Automatic locking after closing the last door

⚠ **WARNING** Risk of fatalities due to exposure to extreme heat- or cold in the vehicle

If persons – and in particular children – are exposed to solar radiation, or the effects of heat or cold for prolonged periods of time, there is a risk of sustaining injuries or even fatalities!

▶ Never leave people – especially children – unattended in the vehicle.

⚠ **WARNING** Risk of accident and injury due to children left unattended in the vehicle

If you leave children unattended in the vehicle, they could, in particular:

- open doors, thereby endangering other persons or road users.
- get out and be struck by oncoming traffic.
- operate vehicle equipment and become trapped, for example.

In addition, the children could also set the vehicle in motion by, for example:

- releasing the parking brake.
- changing the gearbox position.
- starting the vehicle.

▶ Never leave children unattended in the vehicle.

▶ When leaving the vehicle, always take the key with you and lock the vehicle.

▶ Keep the key out of reach of children.

⚠ **WARNING** Accident- and risk of injury with unsecured or unattended animals in parked vehicle

If you leave animals in the vehicle unattended or unsecured, they could possiblypress buttons or switches.

An animal may:

- Activate vehicle equipment and become trapped, for example.
- Switch systems on or- off and endanger other road users

▶ Never leave animals in the vehicle unattended.

▶ Always secure animals properly, e.g. with a suitable animal transport box.

After leaving the vehicle and closing the last door, the vehicle is automatically locked. This also applies if the key is still in the vehicle.

There is a risk of locking oneself out. The vehicle can only be opened again with a vehicle key.

- Always carry the vehicle key with you when leaving the vehicle.

ⓘ If the vehicle is locked and the only available key is in the vehicle, notify a qualified specialist workshop.

Warning information, according to the respective version of driver's door, partition or sliding door

Unlocking and locking the driver's door with the emergency key

ⓘ If you want to lock the vehicle completely with the emergency key, press the button for the locking mechanism from inside first with the driver's door open. Then lock the driver's door with the emergency key.

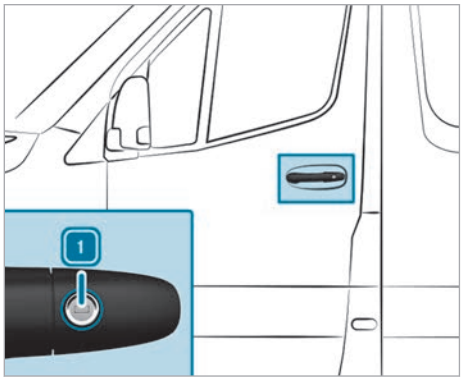

▶ **To unlock:** Turn the emergency key counter-clockwise to position 1.

▶ **To lock:** turn the emergency key clockwise to position 1.

ⓘ **Right-hand-drive vehicles:** turn the emergency key in the opposite direction for each case.

Using the grab handles when getting into and out of the vehicle

The entrances may be equipped with grab handles and steps. The grab handles to enter and exit the vehicle are located at the front door and the sliding door.

ⓘ To avoid risks:

- Always use the grab handles and steps when getting into and out of the vehicle. These are specifically designed to withstand such loads.
- Keep steps and entrances free from dirt, e.g. mud, clay, snow and ice.

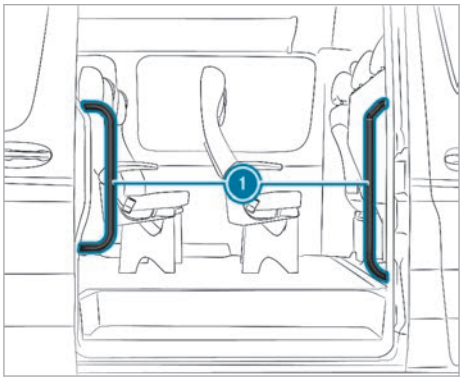

Getting into and out of the vehicle (example: sliding door)

▶ When getting into and out of the vehicle, use the grab handles ① and steps.

ⓘ The grab handles on the sliding door are provided as an easy entry and exit feature and can hold up to a maximum of 176 lbs (80 kg).
Do not use the grab handle on the sliding door to secure a load (lashing). Do not secure any objects to the easy entry and exit features.

Sliding door

Opening/closing the sliding door from the outside

⚠ **WARNING** Risk of becoming trapped due to an open sliding door which is not engaged in place

On an incline, the sliding door can move by itself.

This can cause you or other people to become trapped.

▶ Always make sure that the open sliding door is engaged. To do so, open the sliding door to the stop.

⚠ **WARNING** Risk of becoming trapped due to sliding door opening towards the rear

When you open the sliding door, the sliding door could hit other people as it moves towards the rear of the vehicle.

▶ Only open the sliding door when traffic conditions permit.

Requirements:
- The vehicle is unlocked.

To open

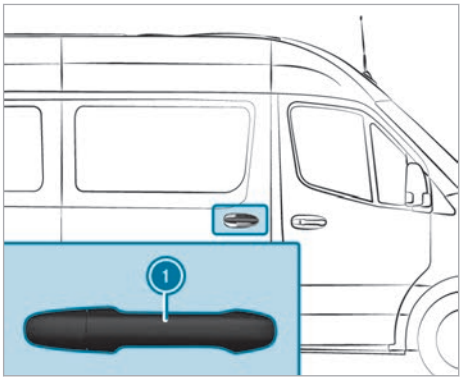

▶ Pull the door handle 1.
The sliding door opens.

▶ Push back the sliding door using the door handle 1 until it engages.

▶ Ensure that the sliding door is fully engaged by gently pulling on the door.

ⓘ If your vehicle features a long sliding door with intermediate locking, the sliding door can be locked in approximately the middle position. This will allow you to access or exit the vehicle without having to always open the sliding door completely to its end position. The sliding door is not fully engaged when in the intermediate catch position.

To close

▶ Pull the door handle 1.
The sliding door is released from its locking mechanism.

▶ Push the sliding door firmly forwards using the door handle 1 and close.

Opening/closing the sliding door from the inside

⚠ **WARNING** Risk of becoming trapped due to an open sliding door which is not engaged in place

On an incline, the sliding door can move by itself.

This can cause you or other people to become trapped.

▶ Always make sure that the open sliding door is engaged. To do so, open the sliding door to the stop.

⚠ **WARNING** Risk of becoming trapped due to sliding door opening towards the rear

When you open the sliding door, the sliding door could hit other people as it moves towards the rear of the vehicle.

▶ Only open the sliding door when traffic conditions permit.

To unlock

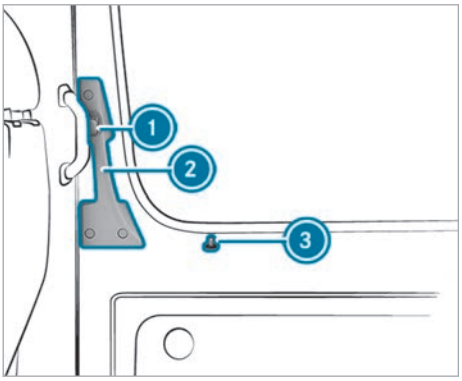

▶ Pull the safety pin 3 upwards manually or use the central locking button to unlock the sliding door (→ page 51).

To open

ⓘ If your vehicle features a long sliding door with intermediate locking, the sliding door can be locked in approximately the middle position. This will allow you to access or exit the vehicle without having to always open the sliding door completely to its end position. The sliding door is not fully engaged when in the intermediate catch position.

▶ Press the button 1.

▶ Push back the sliding door using the door handle 2 until it engages.

▶ Ensure that the sliding door is fully engaged by gently pulling on the door.

To close

▶ Press the button 1.
The sliding door is released from its locking mechanism.

▶ Slide the sliding door firmly forwards using the door handle ② until it closes.

To lock

▶ Push the safety pin ③ downwards manually or use the central locking button to lock the sliding door (→ page 51).

Notes on electrical closing assist

If your vehicle is equipped with electrical closing assist, less force will be required to close the sliding door.

Electric sliding door

Function of the electric sliding door

Your vehicle may feature an electric sliding door on the right side.

You can open and close the sliding door with the following control elements:

- Sliding door button on the center console
- Sliding door button on the door sill (B-pillar)
- Door handle (inside or outside)
- Key

If the electric sliding door is obstructed while opening, it moves a few centimetres in the opposite direction and stops.

If the sliding door is obstructed while closing, it opens fully again.

If the electric motor of the sliding door is in danger of overheating, e.g. due to frequent opening and closing within a short period of time, the sliding door opens fully. The sliding door is then locked in place. The sliding door is operational again after approximately 30 seconds.

In the event of a malfunction or if the battery has been disconnected, you can use the unlocking mechanism to disconnect the sliding door from the electric motor. You can then open or close the sliding door manually (→ page 58).

Opening/closing the electric sliding door with the button

⚠ **WARNING** Risk of becoming trapped due to sliding door opening towards the rear

When you open the sliding door, the sliding door could hit other people as it moves towards the rear of the vehicle.

▶ Only open the sliding door when traffic conditions permit.

⚠ **WARNING** Risk of injury despite the object detection function

The object detection function does not react to soft, light and thin objects, such as fingers. The object detection function cannot prevent someone from becoming trapped in these situations.

▶ When opening and closing the electric sliding door, make sure that no parts of the body are within the operating range of the sliding door.

▶ If someone becomes trapped, press the button again to stop the sliding door.

Object recognition:

If an object obstructs the sliding door as it closes, the sliding door will be stopped. Object recognition is provided solely as an aid. It is not a substitute for you having to pay attention.

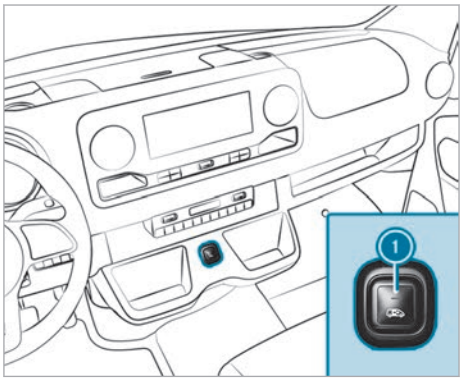

① Sliding door button for the right sliding door

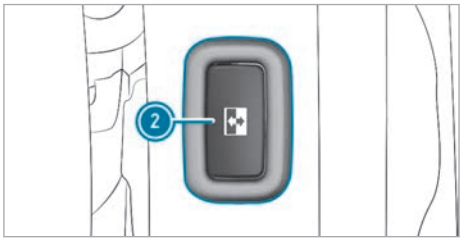

② Sliding door button on the door sill (B-pillar)

For vehicles with partition, the button ② is situated on the partition next to the door sill at the height of the door handle.

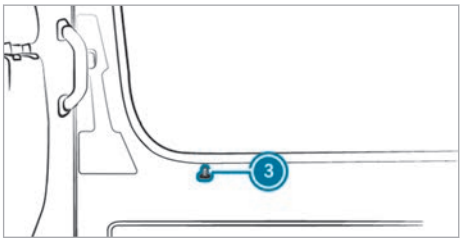

When the sliding door is locked, it can only be opened from the inside by manually unlocking the safety pin ③.

- **To unlock:** pull the safety pin ③ upwards manually or use the central locking button to unlock the sliding door (→ page 51).
- **To open:** press the buttons ① or ② briefly. The sliding door opens automatically.

  When opening with the button ①, two acoustic signals are also sounded.

  The indicator lamp in the button ① flashes and the button ② flashes.

  If the sliding door is opened completely, the indicator lamp in the button ① lights up.
- **To close:** press the buttons ① or ② briefly. The sliding door closes automatically.

  When closing with the button ①, two acoustic signals are also sounded.

  The indicator lamp in the button ① flashes and the button ② flashes.

  If the sliding door is closed completely, the indicator lamp in the button ① goes out.
- **To stop automatic operation:** press the button ① briefly. The sliding door stops.
- **To lock:** push the safety pin ③ downwards manually or use the central locking button to lock the sliding door (→ page 51).

ⓘ When you stop automatic operation during opening of the door, the door closes when you press the button again.

ⓘ In less favourable operating conditions, e.g. frost or ice, or if the vehicle is very dirty, you can press and hold the corresponding button. The electric sliding door moves with increased force. Please note that the object recognition function will then be less sensitive. To stop the movement, release the button.

Opening and closing the electric sliding door with the key

- **To unlock:** press the button on the key briefly.
- **To open/close:** hold the button on the key pressed for longer than 0.5 seconds. Two acoustic signals are sounded and the sliding door opens or closes automatically.
- **To interrupt automatic operation:** press the button on the key briefly. The sliding door stops.

ⓘ If automatic operation is interrupted during the opening process, the door closes if the button is pressed again.

Opening/closing the electric sliding door using the door handle

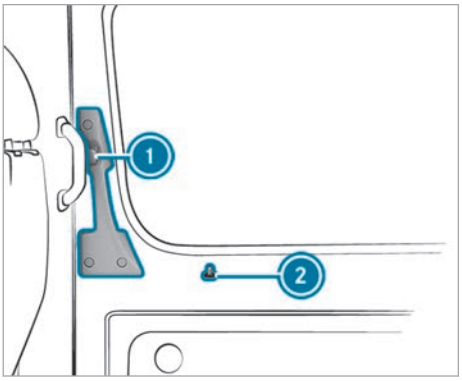

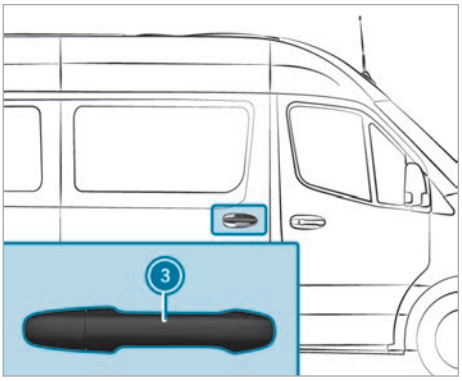

- **To unlock:** pull the safety pin ② upwards manually or use the central locking button to unlock the sliding door (→ page 51).
- **To open/close:** press the button ① or pull on the door handle ③.
  The sliding door opens or closes.
- **To interrupt automatic operation:** press the button ① again or pull on the door handle ③.
  The sliding door stops.

Unlocking the electric sliding door manually

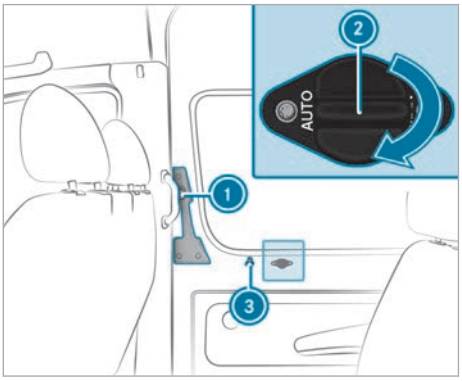

In the event of a malfunction or if the battery has been disconnected, you can use the battery disconnect switch ② to disconnect the sliding door from the electric motor. You can then open or close the sliding door manually.

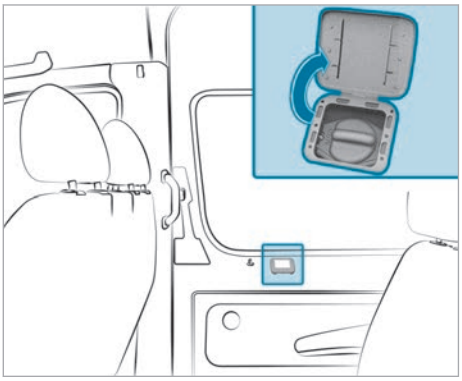

Cover in sliding door trim

- **Vehicles with sliding door trim:** lift up the cover of the battery disconnect switch ②.
  The battery disconnect switch is now accessible.
- **To disconnect the sliding door from the electric motor:** turn the battery disconnect switch ② 180° clockwise.
  The "MAN" position is set.

To unlock

- Pull the safety pin ③ upwards manually or use the central locking button to unlock the sliding door (→ page 51).
- Press the release knob ①.
- Open or close the sliding door with the outside or inside door handle.

Establishing the connection between sliding door and electric motor

- Turn the battery disconnect switch ② 180° counter-clockwise.
  The "AUTO" position is set.
- Adjust the sliding door (→ page 58).
- If it is not possible to rectify the malfunction, consult a qualified specialist workshop.

Resetting the electric sliding door

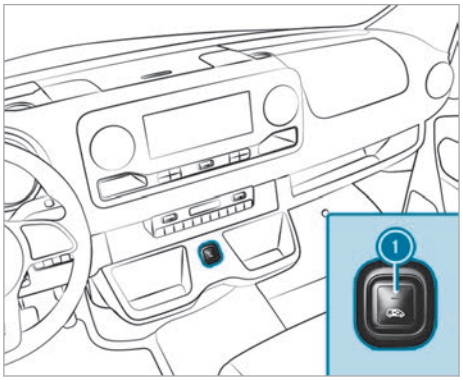

Sliding door button on the center console

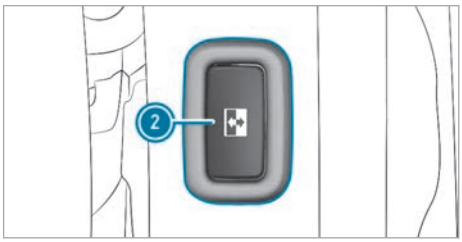

Sliding door button on the door sill (B-pillar)

You must reset the sliding door in the event of a malfunction or voltage drop.

- If the sliding door is open: Hold the 1 button on the center console or the sliding door button 2 on the door sill (B-pillar) pressed until the door closes.

or

- Close the sliding door using the door handle (→ page 57).
- Then briefly press the 1 button on the center console or the sliding door button 2 on the door sill (B-pillar) once or pull the door handle (→ page 57) to open the sliding door completely.
  The sliding door is operational.

Rear-end doors

Opening/closing the rear-end doors from the outside

DANGER Risk of poisoning from exhaust gases

Combustion engines emit poisonous exhaust gases, such as carbon monoxide. Exhaust gases can enter the vehicle interior if the rear-end door is open when the engine is running, especially if the vehicle is in motion.

- Always switch off the engine before opening the rear-end door.
- Never drive with the rear-end door open.

WARNING Danger of accidents due to concealed lighting systems

If you open the rear doors by 90°, the rear lighting systems are concealed.

other road users cannot see the vehicle or can see it only with difficulty

- Therefore, in these or similar cases, secure the vehicle in accordance with national regulations, e.g. with the warning triangle.

WARNING Risk of injury due to the rear-end door swinging open

When you open a rear-end door, the following can occur:

- You or another person can be injured.
- A person may be struck by oncoming traffic.

This is particularly the case if you open the rear-end door more than 90° or if it opens in an uncontrolled manner.

Even rear-end doors which are properly closed can swing open when the vehicle parked is on an incline or it is windy.

- Only open a rear-end door when the traffic conditions and surroundings permit.
- Always make sure that the rear-end doors are properly closed.

NOTE Damage to the rear-end doors due to objects obstructing their range of movement

When the rear-end doors are opened, any objects obstructing the range of movement of the rear-end doors can be damaged as well as the vehicle.

- Make sure that there is sufficient clearance when opening the rear-end doors.

Opening the right rear-end door

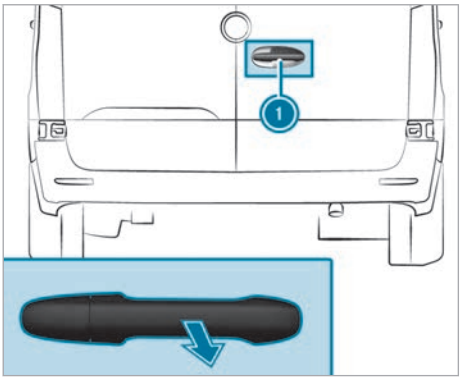

Depending on the respective version of vehicle, the rear-end doors can be locked at an angle of approximately 90° and 270° (side wall).

- Pull the door handle ①.
- Swing the rear-end door to the side until it engages at approximately 90° or 270°.

ⓘ Depending on the respective version of vehicle, the rear-end doors can be opened beyond 90°, even with door check (→ page 60).

Opening the left rear-end door

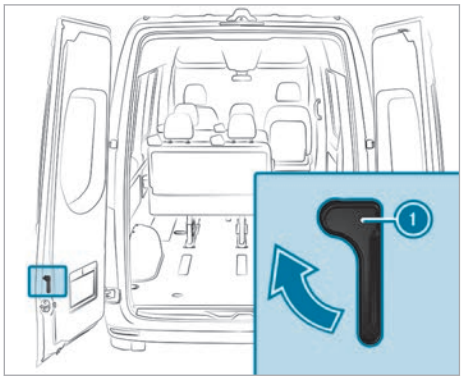

- Ensure that the right rear-end door is open and engaged.
- Pull the release handle ① in the direction indicated by the arrow.
- Swing the rear-end door to the side until it engages at approximately 90° or 270°.

Closing the rear-end doors from the outside

- Close the left rear-end door firmly from the outside.
- Close the right rear-end door firmly from the outside.

Opening rear-end doors with door check beyond 90°

⚠ **WARNING** Risk of injury due to the rear-end door swinging open

When you open a rear-end door, the following can occur:

- You or another person can be injured.
- A person may be struck by oncoming traffic.

This is particularly the case if you open the rear-end door more than 90° or if it opens in an uncontrolled manner.

Even rear-end doors which are properly closed can swing open when the vehicle parked is on an incline or it is windy.

- Only open a rear-end door when the traffic conditions and surroundings permit.
- Always make sure that the rear-end doors are properly closed.

! **NOTE** Damage to the rear-end doors due to objects obstructing their range of movement

When the rear-end doors are opened, any objects obstructing the range of movement of the rear-end doors can be damaged as well as the vehicle.

- Make sure that there is sufficient clearance when opening the rear-end doors.

Requirements

- The vehicle has the necessary equipment for opening the rear-end doors up to an angle of 270° (side wall).

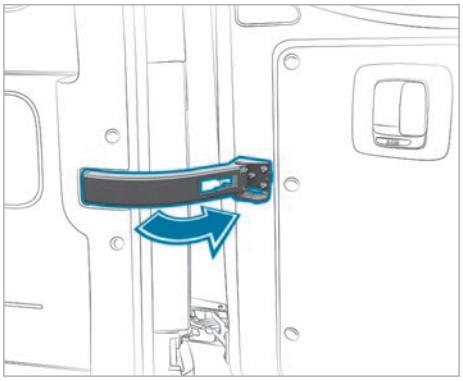

- Open the rear-end door to approximately 45°.
- Pull the door check in the direction indicated by the arrow and hold in place.
- Open the rear-end door beyond 90° so that the door check can no longer lock in place.
- Release the door check and open the rear-end door until it engages at approximately 270°.

Opening/closing the rear-end doors from the inside

WARNING Risk of injury due to the rear-end door swinging open

When you open a rear-end door, the following can occur:

- You or another person can be injured.
- A person may be struck by oncoming traffic.

This is particularly the case if you open the rear-end door more than 90° or if it opens in an uncontrolled manner.

Even rear-end doors which are properly closed can swing open when the vehicle parked is on an incline or it is windy.

- Only open a rear-end door when the traffic conditions and surroundings permit.
- Always make sure that the rear-end doors are properly closed.

NOTE Damage to the rear-end doors due to objects obstructing their range of movement

When the rear-end doors are opened, any objects obstructing the range of movement of the rear-end doors can be damaged as well as the vehicle.

- Make sure that there is sufficient clearance when opening the rear-end doors.

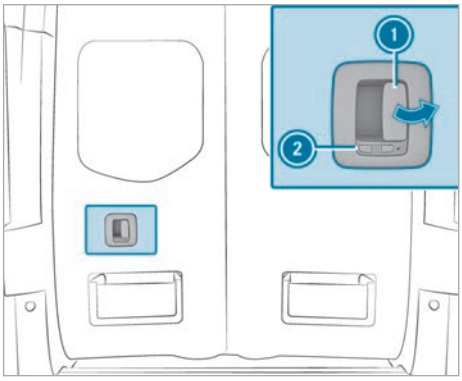

The symbol indicates that the rear-end door is unlocked.

- **To unlock:** slide the catch (2) to the left. The symbol is visible.
- **To open:** Pull the opening lever (1) and open the rear-end door. Swing the rear-end door to the side until it engages.
- **To close:** Ensure that the left rear-end door is closed. Pull the right rear-end door firmly shut using the door handle.
- **To lock:** slide the catch (2) to the right. The symbol is visible.

Partition sliding door

Opening and closing the partition sliding door

WARNING Risk of becoming trapped if the partition sliding door is not engaged

The partition sliding door may move on its own while the vehicle is in motion.

This can cause you or other people to become trapped.

- Before every journey, close the partition sliding door and ensure that it is engaged.

From the cab

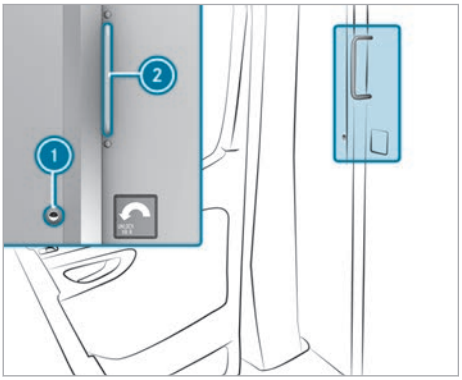

- **To lock and unlock with a separate key:** turn the lock cylinder (1) to the right to lock or to the left to unlock.
- **To open:** using the door handle (2), push the sliding door to the right as far as it will go.
- **To close:** using the door handle (2), push the sliding door to the left until it engages.

From the cargo compartment

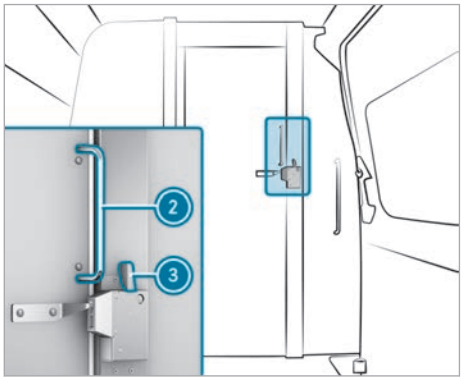

- **To lock and unlock:** push the lever ③ to the left to lock or to the right to unlock.
- **To open:** using the door handle ②, push the sliding door to the left as far as it will go.
- **To close:** using the door handle ②, push the sliding door to the right until it engages.

Electrical step

Function of the electric step

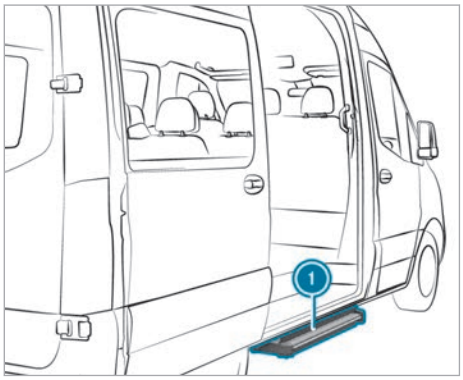

Your vehicle's sliding door may be equipped with an electric step ①.

The electric step automatically extends when the sliding door opens and retracts after the sliding door closes. The electric step is equipped with object detection at the front. If the step meets an object while extending, it will stop. Once you have removed the object, you must first close the sliding door and then open it again so that the step extends completely.

If the electric step prevents loading, you can block it via object detection when the sliding door opens. The electric step will then remain retracted and a fork-lift truck or another lifting vehicle can move closer to the cargo compartment.

If the electric step is obstructed or malfunctions, the instrument cluster will show a display message (→ page 317) to that effect and a warning tone will sound. It will be possible to extend or retract the electric step only partially or not at all. In the event of a malfunction, you will need to retract and lock the electric step manually before continuing your journey (→ page 62). Before passengers exit the vehicle, inform them that the electric step may be unavailable.

Releasing the electrical step in an emergency (manual retraction)

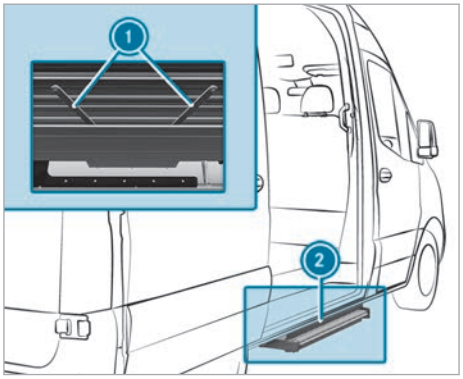

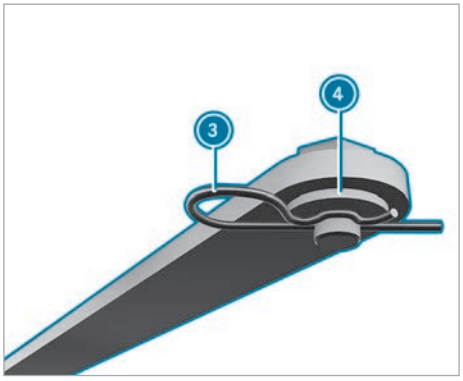

If electric step ② does not retract automatically, you will need to retract and secure step ② manually before continuing your journey.

- Pull out spring cotters ③ from their pins using both bars ① on the underside of step ②.
- Remove washers ④ and detach both bars ①.

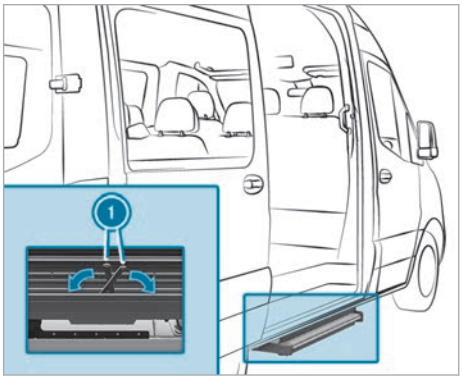

- Fold bars ① into the housing of step ②.
- Slide step ② into its housing.

ⓘ When securing step ② for the first time, you will need to puncture a film with spring cotters ③.

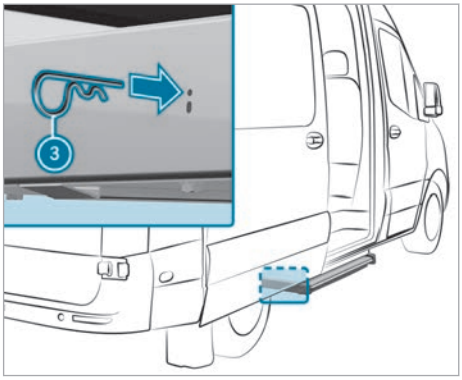

- On both sides, insert spring cotters ③ through the housing's holes and into step ② as far as they will go.
  Step ② will now be secured in its housing.

Side window

Opening and closing the side windows

WARNING Risk of entrapment when opening a side window

When opening a side window, parts of the body could be drawn in or become trapped between the side window and window frame.

- When opening, make sure that nobody is touching the side window.
- If someone is trapped, release the button immediately or pull it in order to close the side window again.

WARNING Risk of becoming trapped when closing a side window

When closing a side window, body parts could be trapped in the closing area in the process.

- When closing, make sure that no body parts are in the closing area.
- If someone is trapped, release the button immediately or press the button in order to reopen the side window.

WARNING Risk of becoming trapped when children operate the side windows

Children could become trapped if they operate the side windows, particularly when unattended.

- Never leave children unattended in the vehicle.
- When leaving the vehicle, always take the SmartKey with you and lock the vehicle.

WARNING Risk of fatalities due to exposure to extreme heat- or cold in the vehicle

If persons – and in particular children – are exposed to solar radiation, or the effects of heat or cold for prolonged periods of time, there is a risk of sustaining injuries or even fatalities!

- Never leave people – especially children – unattended in the vehicle.

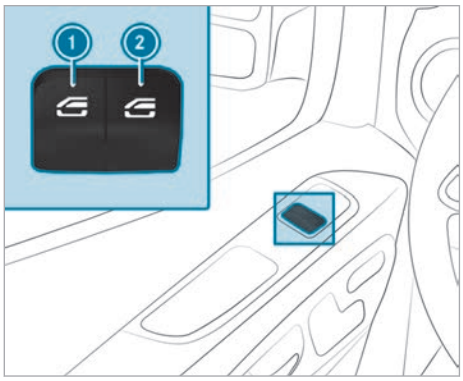

- **To open manually:** press and hold button 1 or 2.
- **To close manually:** pull and hold button 1 or 2.

The windows in the front doors can also be operated automatically.

- **To open completely:** briefly press button 1 or 2 beyond the pressure point.
  Automatic operation begins.
- **To close completely:** briefly pull button 1 or 2 beyond the pressure point.
  Automatic operation begins.
- **To interrupt automatic operation:** briefly press or pull button 1 or 2 again.

Automatic reversing function of the side windows
If an object obstructs a side window during the closing process, the side window will open again automatically. The automatic reversing function serves solely as an aid and is not a substitute for your attentiveness.

ⓘ If automatic operation of the side window does not work, there will also be no automatic reversing function.

- Ensure that all body parts are clear of the closing area during the closing process.

⚠ **WARNING** Risk of becoming trapped despite there being reversing protection on the side window

The reversing function will not react:

- to soft, light and thin objects, e.g. fingers
- over the last ⅙ in (4 mm) of the closing path
- during resetting
- when the side window is closed again manually immediately after automatic reversing

The reversing function cannot prevent someone from becoming trapped in these situations.

- During the closing process, make sure that no body parts are in the closing area.
- If someone becomes trapped, press the button to open the side window again.

Ventilating the vehicle before starting a journey (convenience opening)

⚠ **WARNING** Risk of entrapment when opening a side window

When opening a side window, parts of the body could be drawn in or become trapped between the side window and window frame.

- When opening, make sure that nobody is touching the side window.
- Release the button immediately if somebody becomes trapped.

You can ventilate the vehicle before you begin driving.

The "convenience opening" function can be operated using the key without switching on the vehicle. The key must be in close proximity to the driver's door or front passenger door.

- Press and hold the button on the key.
  The following functions are performed:
  - the vehicle is unlocked
  - the side windows are opened
- **To interrupt convenience opening:** release the button.

Closing the side windows from the outside (convenience closing)

⚠ **WARNING** Risk of entrapment due to not paying attention during convenience closing

When the convenience closing feature is operating, parts of the body could become trapped in the closing area of the side windows.

▶ When the convenience closing feature is operating, monitor the entire closing process and make sure that no body parts are in the closing area.

▶ Press and hold the button [🔒] on the key.

The following functions are performed:

- the vehicle is locked
- the side windows are closed

▶ **To interrupt convenience closing:** release the button [🔒].

Adjusting the side windows

The side windows must be readjusted following a malfunction or an interruption in voltage supply .

▶ Switch on the power supply (→ page 112).

▶ Push both window lifter buttons and hold for approximately one second after the side window has closed.

Rectifying problems with the side windows

⚠ **WARNING** Risk of becoming trapped or fatally injured if reversing protection is not activated

If you close a side window again immediately after it has been blocked, the side window will close with increased or maximum force. The reversing function is then not active and body parts may become trapped.

▶ Make sure that no parts of the body are in the closing area.

▶ To stop the closing process, release the button or press the button again to reopen the side window.

You cannot open or close a side window all the way.

▶ Check to see if there are any objects in the window guide.

▶ Reset the side windows (→ page 65).

The side windows cannot be opened or closed with the vehicle key

Possible cause:

- The key battery is weak or flat.

▶ Check the key battery using the indicator lamp and replace it if necessary (→ page 49).

Anti-theft protection

Function of the immobilizer

The immobilizer prevents your vehicle from being started without the correct key.

The immobilizer will automatically be activated when the vehicle is switched off and deactivated when the vehicle is switched on.

When leaving the vehicle, always take the key with you and lock the vehicle. If the key is left inside the vehicle, anyone can start the vehicle.

ⓘ If the engine cannot be started even though the starter battery is charged, the immobilizer may be defective. Contact a qualified specialist workshop or call 1-800-367-6372 (in the USA) or 1-800-387-0100 (in Canada).

ATA (Anti-Theft Alarm system)

Function of ATA (Anti-Theft Alarm system)

If the ATA system is activated, a visual and audible alarm is triggered in the following situations:

- a side door is opened
- the rear-end door is opened
- the hood is opened
- interior protection is triggered (→ page 67)
- tow-away protection is triggered (→ page 66)

The alarm will not be deactivated, even if the door which was opened to trigger the alarm is immediately closed again, for example.

Canceling a triggered alarm (→ page 66).

The ATA is activated automatically after approximately ten seconds in the following instance:

- after the vehicle has been locked with the key

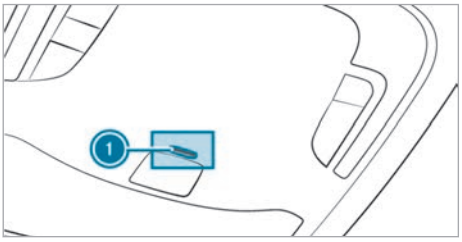

When the ATA system is activated, an indicator lamp ① flashes in the overhead control panel.

ATA is automatically deactivated in the following situations:

- after unlocking the vehicle with the key
- after pressing the start/stop button with the key inside the vehicle

Arming/disarming the ATA (Anti-Theft Alarm system)

To activate

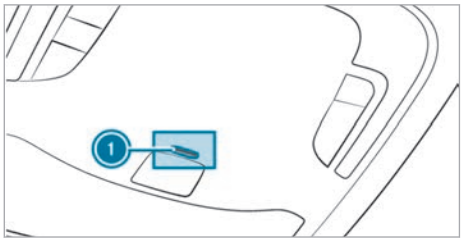

▶ Close all doors.

ⓘ Close the side window or deactivate the interior protection (→ page 67) to prevent a false alarm.

▶ Lock the vehicle with the key.
The indicator lamp ① in the overhead control panel begins flashing.

To deactivate

▶ Unlock the vehicle with the key.
The indicator lamp ① in the overhead control panel goes out.

ⓘ The vehicle locks again automatically if you do not open a door within 40 seconds after unlocking the vehicle.

Canceling the alarm

▶ Press the buttons 🔓 or 🔒 on the key.

or

▶ Press the start/stop button with the key inside the vehicle.
The alarm is switched off.

Function of the tow-away alarm

When the tow-away alarm is armed, a visual and audible alarm is triggered if the vehicle's inclination changes. This may be the case, forexample, if the vehicle is lifted on one side.

Arming/disarming the tow-away alarm

Arming/disarming

▶ Lock the vehicle with the key.
The tow-away alarm will automatically be armed after about 40 seconds:

▶ Open the vehicle with the key.
The tow-away alarm will be disarmed.

The tow-away alarm will be armed if the following condition is met:

- All the doors are closed.

Deactivating

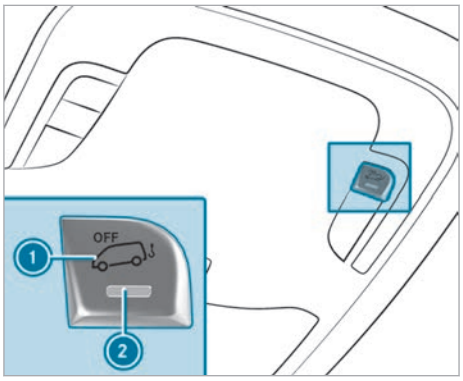

▶ Switch off the vehicle (→ page 112).

▶ Press button ①.
When the button is released, indicator lamp ② on the button will light up for approximately three seconds.

▶ Lock the vehicle with the key.
The tow-away alarm will be disarmed.

The tow-away alarm will be armed again in the following cases:

- The vehicle is unlocked again.
- A door is opened.
- The vehicle is locked again.

Disarm the tow-away alarm when locking your vehicle in the following situations:

- when loading and/or transporting the vehicle on a ferry or car transporter, for example
- when parking the vehicle on a movable surface, such as a split-level garage

False alarms will thus be prevented.

Function of interior protection

Function

A visual and acoustic alarm is triggered if the armed interior protection detects motion in the vehicle interior.

Depending on the respective equipment, the interior protection may be automatically deactivated temporarily if the stationary heater is switched on.

Arming/deactivating the interior protection

Arming

- Close the side windows.
- Ensure that no objects (suchas mascots or clothes hangers) are hanging on the inside mirror or on the grab handles. False alarms will thus be prevented.
- Lock the vehicle with the key.
  The interior protection is armed after approximately 40 seconds.

The interior protection is activated if the following condition is met:

- All the doors are closed.

Switching off

- Unlock the vehicle with the key.
  The interior protection automatically switches off.

Deactivating

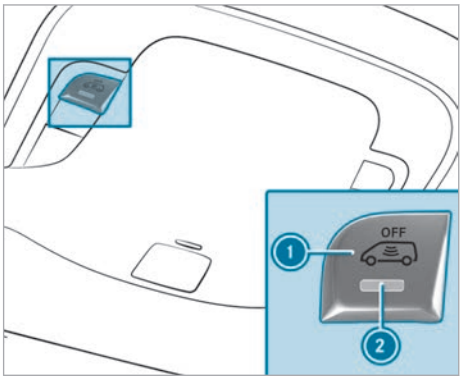

- Switch off the vehicle (→ page 112).
- Press the ① button.
  When the button is released, indicator lamp ② in the button lights up for approximately three seconds.
- Lock the vehicle with the key.
  The interior protection is deactivated.

The interior protection is activated again in the following instances:

- the vehicle is unlocked again.
- a door is opened
- the vehicle is locked again.

Deactivate the interior protection when locking your vehicle in the following situations:

- people or animals remain inside the vehicle
- if the side windows remain open
- when transporting the vehicle, for example on a ferry or car transporter.

False alarms will thus be prevented.

Notes on the correct driver's seat position

WARNING Risk of accident due to adjusting the vehicle settings while the vehicle is in motion

You could lose control of the vehicle in the following situations in particular:

- If you adjust the driver's seat, the head restraint, the steering wheel or the mirror while the vehicle is in motion
- If you fasten your seat belt while the vehicle is in motion

▶ Before starting the vehicle: in particular, adjust the driver's seat, head restraint, steering wheel and mirror, and fasten your seat belt.

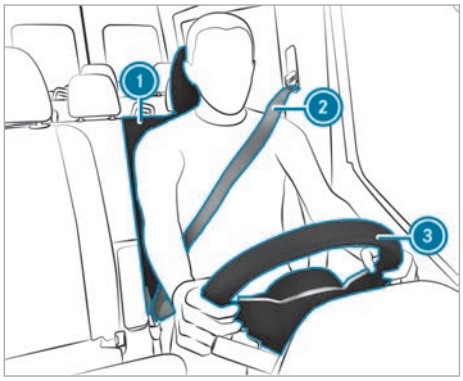

Ensure the following when adjusting steering wheel ③, seat belt ② or driver's seat ①:

- You are sitting as far away from the driver's air bag as possible.
- You are sitting in an upright position.
- Your thighs are gently supported by the seat cushion.
- Your legs are not fully extended and you can reach the pedals easily.
- The back of your head is supported at eye level by the middle part of the head restraint.
- You can hold the steering wheel with your arms slightly bent.
- You can move your legs without any restrictions.
- You can see all of the instrument cluster displays well.
- You have a good overview of the traffic conditions.
- Your seat belt sits snugly against your body and passes across the center of your shoulder and across your hips in the pelvic area.

Notes on grab handles

WARNING Risk of injury due to excessive load on the grab handles

If you apply your full body weight to the grab handle or pull it abruptly, the grab handle may be damaged or come loose from its anchorage. This may result in injuries.

▶ Use the grab handles only to stabilize the seating position or to assist in getting in and out of the seat.

Seats

Adjusting the front seats manually (without Seat Comfort Package)

WARNING Risk of becoming trapped if the seat is adjusted by children

Children could become trapped if they adjust the seats, particularly if they are unattended.

▶ When leaving the vehicle, always take the key with you and lock the vehicle.

▶ Never leave children unattended in the vehicle.

WARNING Risk of becoming trapped if the seats are adjusted

When adjusting a seat, you may trap yourself or a vehicle occupant, e.g. on the seat guide rail.

▶ Make sure that no part of the body is within the seat's range of motion when adjusting a seat.

Observe the safety notes on "Air bags" and "Children in the vehicle".

WARNING Risk of accident due to the driver's seat not being engaged

The driver's seat may move unexpectedly while driving.

This could cause you to lose control of the vehicle.

▶ Always make sure that the driver's seat is engaged before starting the vehicle.

⚠ **WARNING** Risk of accident due to adjusting the vehicle settings while the vehicle is in motion

You could lose control of the vehicle in the following situations in particular:

- If you adjust the driver's seat, the head restraint, the steering wheel or the mirror while the vehicle is in motion
- If you fasten your seat belt while the vehicle is in motion

▶ Before starting the vehicle: in particular, adjust the driver's seat, head restraint, steering wheel and mirror, and fasten your seat belt.

⚠ **WARNING** Risk of becoming trapped if you do not take care while adjusting the seat height

If you do not take care while adjusting the seat height, you or other vehicle occupants could become trapped and suffer injury as a result.

In particular, children could inadvertently actuate the seat adjustment system and become trapped as a result.

▶ Make sure that no hands or other parts of the body get under the seat adjustment system levers while the seat is being moved.

⚠ **WARNING** Risk of injury due to head restraints not being installed or being adjusted incorrectly

If head restraints have not been installed or have not been adjusted correctly, there is an increased risk of injury in the head and neck area, e.g. in the event of an accident or when braking.

▶ Always drive with the head restraints installed.

▶ Before driving off, make sure for every vehicle occupant that the center of the head restraint supports the back of the head at about eye level.

Do not swap the head restraints on the front and rear seats. Otherwise, you will not be able to adjust the heights and angles of the head restraints correctly.

Using the head restraint fore-and-aft adjustment, adjust the head restraint so that it is as close to the back of your head as possible.

⚠ **WARNING** Risk of injury or death due to an incorrect seat position

The seat belt does not offer the intended level of protection if you have not moved the seat backrest to an almost vertical position.

In particular, you could slip beneath the seatbelt and become injured.

▶ Adjust the seat properly before beginning your journey.

▶ Always ensure that the seat backrest is in an almost vertical position and that the shoulder belt is routed across the center of your shoulder.

! **NOTE** Damage to the seats when moving the seats back

The seats may be damaged by objects when moving the seats back.

▶ When moving the seats back, make sure that there are no objects in the footwell, under or behind the seats.

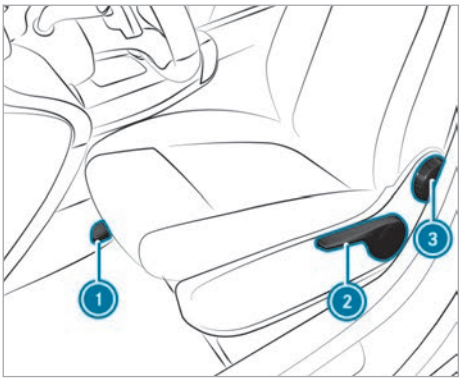

① Seat fore-and-aft position
② Seat height
③ Seat backrest inclination

▶ **To adjust the seat fore-and-aft position:** lift the lever ① and slide the seat into the desired

position. Ensure that the seat is locked in place.

- **To adjust the seat height:** keep on pushing or pulling the lever ② until the required seat height is reached.
- **To adjust the seat backrest inclination:** rotate the handwheel ③ forwards and backwards until the desired position is reached.

Adjusting the front seats manually (with Seat Comfort Package)

WARNING Risk of becoming trapped if the seat is adjusted by children

Children could become trapped if they adjust the seats, particularly if they are unattended.

- When leaving the vehicle, always take the key with you and lock the vehicle.
- Never leave children unattended in the vehicle.

WARNING Risk of becoming trapped if the seats are adjusted

When adjusting a seat, you may trap yourself or a vehicle occupant, e.g. on the seat guide rail.

- Make sure that no part of the body is within the seat's range of motion when adjusting a seat.

Observe the safety notes on "Air bags" and "Children in the vehicle".

WARNING Risk of accident due to the driver's seat not being engaged

The driver's seat may move unexpectedly while driving.

This could cause you to lose control of the vehicle.

- Always make sure that the driver's seat is engaged before starting the vehicle.

WARNING Risk of accident due to adjusting the vehicle settings while the vehicle is in motion

You could lose control of the vehicle in the following situations in particular:

- If you adjust the driver's seat, the head restraint, the steering wheel or the mirror while the vehicle is in motion
- If you fasten your seat belt while the vehicle is in motion

- Before starting the vehicle: in particular, adjust the driver's seat, head restraint, steering wheel and mirror, and fasten your seat belt.

WARNING Risk of becoming trapped if the seat height is adjusted carelessly

If you adjust the seat height carelessly, you or other vehicle occupants could be trapped and thereby injured.

Children in particular could accidentally press the electrical seat adjustment buttons and become trapped.

- While moving the seats, make sure that hands or other body parts do not get under the lever assembly of the seat adjustment system.

WARNING Risk of injury due to head restraints not being installed or being adjusted incorrectly

If head restraints have not been installed or have not been adjusted correctly, there is an increased risk of injury in the head and neck area, e.g. in the event of an accident or when braking.

- Always drive with the head restraints installed.
- Before driving off, make sure for every vehicle occupant that the center of the head restraint supports the back of the head at about eye level.

Do not swap the head restraints on the front and rear seats. Otherwise, you will not be able to adjust the heights and angles of the head restraints correctly.

Using the head restraint fore-and-aft adjustment, adjust the head restraint so that it is as close to the back of your head as possible.

WARNING Risk of injury or death due to an incorrect seat position

The seat belt does not offer the intended level of protection if you have not moved the seat backrest to an almost vertical position.

In particular, you could slip beneath the seat-belt and become injured.

- Adjust the seat properly before beginning your journey.
- Always ensure that the seat backrest is in an almost vertical position and that the shoulder belt is routed across the center of your shoulder.

NOTE Damage to the seats when moving the seats back

The seats may be damaged by objects when moving the seats back.

- When moving the seats back, make sure that there are no objects in the footwell, under or behind the seats.

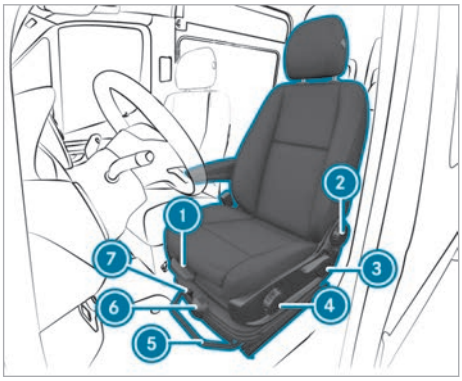

Illustration of the comfort suspension seat

1. Seat cushion length
2. Seat backrest inclination
3. Seat height
4. Seat cushion inclination
5. Seat fore-and-aft position
6. Seat suspension
7. Vibration limiting

- **To adjust the seat cushion length:** lift the lever 1 and slide the front part of the seat cushion forwards or backwards.
- **To adjust the seat backrest inclination:** rotate the handwheel 2 forwards and backwards until the desired position is reached.
- **To adjust the seat height:** pull or push the lever 3 until the desired position is reached.
- **To adjust the seat cushion inclination:** rotate the handwheel 4 forwards and backwards until the desired position is reached.
- **To adjust the seat fore-and-aft position:** lift the lever 5 and slide the seat into the desired position.
- **To check for safety:** ensure that the seat is locked in place.
- **To adjust the seat suspension:** take your weight off the seat.
- Using the handwheel 6, set the body weight (88 lb (40 kg) to 265 lb (120 kg)) so that the seat suspension works optimally. If you set a higher weight, the seat suspension will become firmer. The seat will then not vibrate as much. If the seat vibrates often and significantly, you can lock it in place in the lower position.
- **To engage vibration limiting:** turn the lever 7 upwards.
  The next time the seat vibrates, the seat will lock in place.
- **To release vibration limiting:** turn the lever 7 to the right.
  The seat will then be able to vibrate.

Adjusting the front seat electrically

WARNING Risk of becoming trapped if the seat is adjusted by children

Children could become trapped if they adjust the seats, particularly if they are unattended.

- When leaving the vehicle, always take the key with you and lock the vehicle.
- Never leave children unattended in the vehicle.

The seats can be adjusted when the vehicle is switched off.

WARNING Risk of becoming trapped if the seats are adjusted

When adjusting a seat, you may trap yourself or a vehicle occupant, e.g. on the seat guide rail.

▶ Make sure that no part of the body is within the seat's range of motion when adjusting a seat.

Observe the safety notes on "Air bags" and "Children in the vehicle".

⚠ **WARNING** Risk of accident due to the driver's seat not being engaged

The driver's seat may move unexpectedly while driving.

This could cause you to lose control of the vehicle.

▶ Always make sure that the driver's seat is engaged before starting the vehicle.

⚠ **WARNING** Risk of accident due to adjusting the vehicle settings while the vehicle is in motion

You could lose control of the vehicle in the following situations in particular:

- If you adjust the driver's seat, the head restraint, the steering wheel or the mirror while the vehicle is in motion
- If you fasten your seat belt while the vehicle is in motion

▶ Before starting the vehicle: in particular, adjust the driver's seat, head restraint, steering wheel and mirror, and fasten your seat belt.

⚠ **WARNING** Risk of becoming trapped if the seat height is adjusted carelessly

If you adjust the seat height carelessly, you or other vehicle occupants could be trapped and thereby injured.

Children in particular could accidentally press the electrical seat adjustment buttons and become trapped.

▶ While moving the seats, make sure that hands or other body parts do not get under the lever assembly of the seat adjustment system.

⚠ **WARNING** Risk of injury due to head restraints not being installed or being adjusted incorrectly

If head restraints have not been installed or have not been adjusted correctly, there is an increased risk of injury in the head and neck area, e.g. in the event of an accident or when braking.

▶ Always drive with the head restraints installed.

▶ Before driving off, make sure for every vehicle occupant that the center of the head restraint supports the back of the head at about eye level.

Do not swap the head restraints on the front seats. Otherwise, you will not be able to adjust the heights and angles of the head restraints correctly.

Using the head restraint fore-and-aft adjustment, adjust the head restraint so that it is as close to the back of your head as possible.

⚠ **WARNING** Risk of injury or death due to an incorrect seat position

The seat belt does not offer the intended level of protection if you have not moved the seat backrest to an almost vertical position.

In particular, you could slip beneath the seatbelt and become injured.

▶ Adjust the seat properly before beginning your journey.

▶ Always ensure that the seat backrest is in an almost vertical position and that the shoulder belt is routed across the center of your shoulder.

! **NOTE** Damage to the seats when moving the seats back

The seats may be damaged by objects when moving the seats back.

▶ When moving the seats back, make sure that there are no objects in the footwell, under or behind the seats.

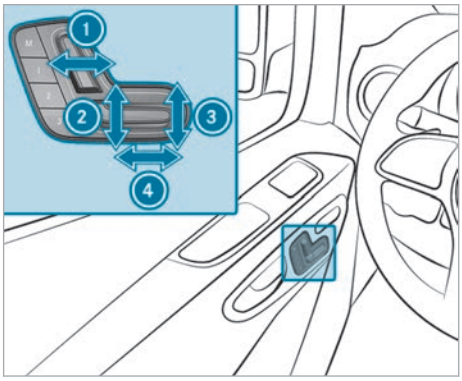

1 Seat backrest inclination
2 Seat height
3 Seat cushion inclination
4 Seat fore-and-aft position

▶ Save the adjustments with the memory function (→ page 73).

Setting 4-way lumbar support

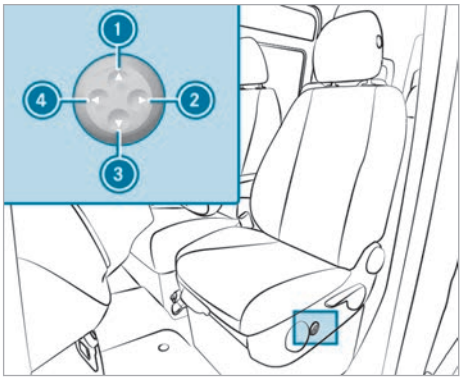

1 Higher
2 Softer
3 Lower
4 Firmer

▶ Use buttons 1 to 4 adjust the backrest contour individually to your spine.

Operating the memory function

WARNING Risk of an accident if the memory function is used while driving

If you use the memory function on the driver's side while driving, you could lose control of the vehicle as a result of the adjustments being made.

▶ Only use the memory function on the driver's side when the vehicle is stationary.

WARNING Risk of entrapment when adjusting the seat with the memory function

When the memory function adjusts the seat, you and other vehicle occupants – particularly children – could become trapped.

▶ During the adjustment process of the memory function, make sure that no one has any body parts in the sweep of the seat.

▶ If somebody becomes trapped, immediately release the memory function position button.
The adjustment process is stopped.

WARNING Danger of entrapment when memory function is activated by children

When children activate the memory function, they can get trapped, especially if they are unsupervised.

▶ Never leave children unattended in the vehicle.

▶ When leaving the vehicle, always take the key with you and lock the vehicle.

The memory function can be used when the vehicle is switched off.

Storing seat adjustments

Seat adjustments for up to three people can be stored and called up using the memory function. You can adjust the seat and the backrest.

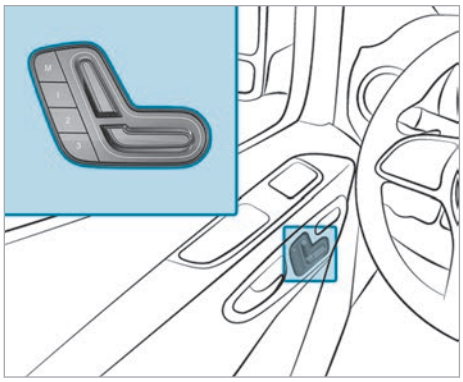

- Adjust the seat to the desired position.
- Press memory button M together with one of preset position buttons 1, 2 or 3.
  An acoustic signal will sound. The settings are stored.
- **To call up:** press and hold preset position button 1, 2 or 3 until the front seat is in the stored position.

Rotating the front seats

WARNING Risk of injury or fatal injuries if the driver's seat and front passenger seat are not engaged

In this situation, the restraint systems cannot perform their intended protective function.

- Engage the driver's seat and front passenger seat in the direction of travel before you start the vehicle.

WARNING Risk of accident due to adjusting the vehicle settings while the vehicle is in motion

You could lose control of the vehicle in the following situations in particular:

- If you adjust the driver's seat, the head restraint, the steering wheel or the mirror while the vehicle is in motion
- If you fasten your seat belt while the vehicle is in motion

- Before starting the vehicle: in particular, adjust the driver's seat, head restraint, steering wheel and mirror, and fasten your seat belt.

WARNING Risk of injury when the seat is pushed backwards

If the seat has been pushed backwards, you may injure yourself on the seat guide rails protruding at the front.

- Make sure that you do not touch the seat guide rails.

You can rotate the driver's and front passenger seats by 50° and 180°. The seats engage both in and opposite to the direction of travel as well as at 50° towards the exit.

- Ensure that the parking brake is applied and the brake lever (if applicable) is down as far as it will go (→ page 144, 141).
- When rotating the seat, open the respective front door in order to avoid a collision with the door trim.
- Adjust the steering wheel in such a way that there is sufficient clearance to rotate and adjust the driver's seat (→ page 81).
- Slide the front passenger seat forward before rotating it (→ page 68).
- **To rotate the seat:** push lever (1) towards the door and rotate the seat slightly inwards.
  The turning device will be unlocked.
- Release lever (1) again.
- Rotate the seat outwards or inwards into the required position.

Folding the co-driver bench seat cushion forwards and backwards

- **To fold the seat surface forward:** lift seat surface out of front anchorage (1).
- Pull the seat surface out of rear anchorage (2) and move it slightly forwards.
- Fold the rear edge of the seat surface upwards.

ⓘ You can stow individual objects in the stowage compartment beneath the co-driver bench seat.

- **To fold back the seat surface:** fold the rear edge of the seat surface downwards.
- Slide the seat surface under the seat backrest into rear anchorage (2).
- Push the front seat surface downwards until it engages in front anchorage (1).

Folding the folding seat up/down

WARNING Risk of injury when using the folding seat due to inserted key

The key in the lock of the partition wall sliding door may come into contact with the person on the folding seat.

- Always remove the key before a person sits on the folding seat.

WARNING Risk of becoming trapped when folding down the folding seat

Hands or other parts of the body may become trapped when you fold down the folding seat.

- When folding down the folding seat, be careful not to trap your hands or other body parts in the seat's area of movement.

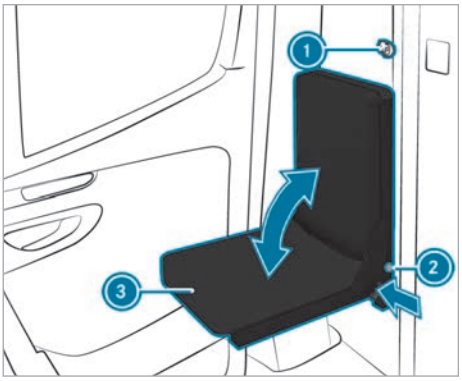

- Remove the key (1) from the partition sliding door.
- **To fold down the seat cushion:** push the push button on the catch (2) and fold down the seat cushion (3) approximately 20 degrees (one fifth of the folding distance).
- Release the push button on the catch (2) and fold the seat cushion (3) further down by pushing on the center with both hands.

ⓘ The seat cushion (3) is spring-loaded and will drop down automatically beyond a certain tilt angle.

- Move the seat cushion (3) until it is locked. The push button on the catch (2) must be completely flush with the seat frame.
- **To fold up the seat cushion:** push the push button on the catch (2) and fold up the seat cushion (3) approximately 20 degrees (one fifth of the folding distance).
- Release the push button on the catch (2) and fold the seat cushion (3) further up by pulling on the center with both hands.
- Move the seat cushion (3) until it is locked. The push button on the catch (2) must be completely flush with the seat frame.

Notes for vehicles without a front passenger seat

Retrofitting a seat on the front passenger side is not permitted in a vehicle that is delivered from the factory without a front passenger seat (country-specific).

If, contrary to the vehicle documents, you retrofit a seat on the passenger side and/or make changes to the vehicle electronics, the general operating permit will be rendered invalid.

WARNING Risk of injury or death due to modifications to the restraint system

Vehicle occupants may no longer be protected as intended if alterations are made to the restraint system.

- Never alter the parts of the restraint system.
- Never tamper with the wiring or any electronic component parts or their software.

WARNING Risk of accident or injury due to incorrect modifications on electronic component parts

Modification of electronic components, their software or wiring could impair their function and/or the function of other networked component parts or safety-relevant systems.

This can endanger the operating safety of the vehicle.

- Never tamper with the wiring and electronic component parts or their software.
- You should have all work on electrical and electronic components carried out at a qualified specialist workshop.

Adhesive label on seat base

You can obtain further information from any authorized Mercedes-Benz Center.

Installing and removing the rear bench seat

WARNING Risk of injury due to incorrect installation of the rear bench seat

If the rear seat is unsuitable, the seat belts may not perform their intended protective function.

- Install the rear seat bench as described and only in the direction of travel.
- Installation of the rear bench seat in a face-to-face position is not permitted.
- Use only rear bench seats that have been approved by Mercedes-Benz for your vehicle.

WARNING Risk of injury if the rear bench seat is not locked in place

If the rear bench seat is not stable, it may tip over during a journey.

- Before setting off, ensure that the rear bench seat is engaged. The red indicator tabs must not be visible on the release handle.
- If the red indicator tabs are visible on the release handle, re-engage the rear bench seat.

WARNING Risk of injury when installing and removing the rear bench seat

When you install or remove the rear bench seat, body parts such as feet may become trapped when the rear bench seat is tipped.

- When installing and removing the rear bench seat, ensure that there are no body parts between the rear bench seat and the floor.

NOTE Damage to the rear bench seat rollers due to misuse

If the rear bench seat is used improperly or removed incorrectly, the rear bench seat rollers may be damaged.

- If the rear bench seat is in the seat shell, do not pull it towards the rear-end door. Roll the rear seat only beside the seat shells.
- Do not roll or use the rear bench seat as a means of transport when removed.

Installation position of three-person and four-person rear bench seat with strut

The three-person rear bench seat is available with or without a strut. The four-person rear bench seat is available only with a strut.

The strut is located on the rear side of the rear bench seat.

Install the three-person rear bench seat with strut only in the 3rd seat row (above the rear axle). Install the four-person rear bench seat only on the last seat row.

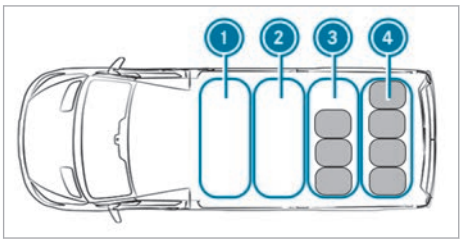

Vehicles with four seat rows

1. 1st seat row
2. 2nd seat row
3. 3rd seat row: three-person rear bench seat with strut
4. 4th seat row: four-person rear bench seat with strut

- Install the three-person rear bench seat on the 3rd seat row 3.
- Install the four-person rear bench seat on the 4th seat row 4.

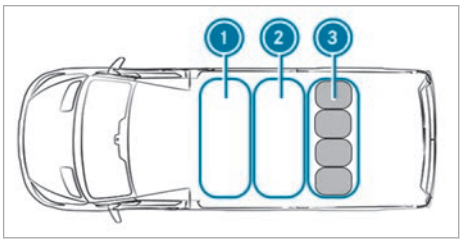

Vehicles with three seat rows

1. 1st seat row
2. 2nd seat row
3. 3rd seat row: four-person rear bench seat with strut

- Install the four-person rear bench seat on the 3rd seat row 3.

Removing the rear bench seat

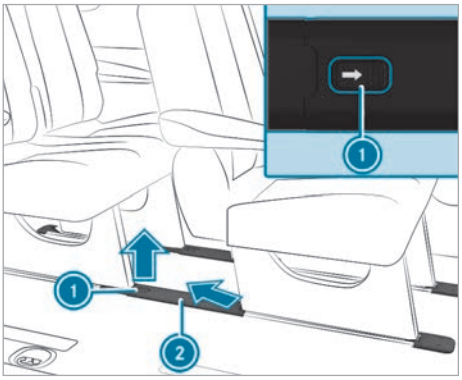

Perform these tasks carefully with the assistance of a 2nd person.

- **To remove the covers of the seat shells:** push retaining clip 1 in the direction of the arrow and detach cover 2 by pushing it to the top rear at an angle.

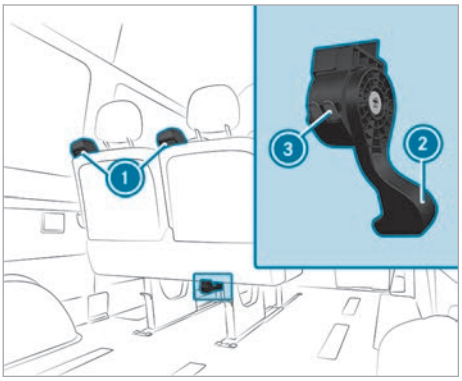

- Push release handle 2 for the bench seat all the way down and hold it there. At the same time, tilt the bench seat backwards slightly using the release handle and pull it slightly backwards.
- Let go of the release handle.
  The locks on the bench seat legs will be unlocked and red indicator tabs 3 on the housing of release handle 2 will be visible.
- Hold the unlocked bench seat by grab handles 1 and pull backwards slightly.

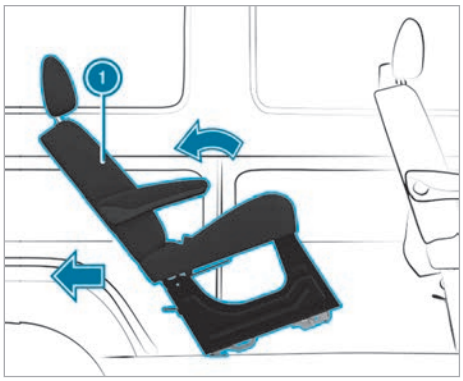

- Tilt bench seat 1 backwards and pull it out of the seat shells.

ⓘ If the bench seat cannot be pulled out of the seat shells, the bench seat may be wedged in the seat anchorage. This can happen if the bench seat is tilted too far backwards.

If the seat cannot be pulled out of the seat shells, proceed as follows:

- Tilt the bench seat forwards without engaging it.
- Pull the bench seat backwards again using release handle 2.
- Tilt the bench seat slightly backwards and pull it out of the seat shells.
- To remove or store the bench seat, place it next to the seat shells and roll it towards the rear doors.

or

- Lift the bench seat out from the side to store it.

ⓘ It may be necessary for the bench seats in front or behind to be removed.

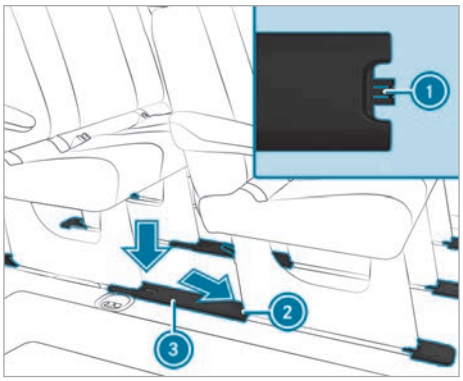

- **To attach the covers of the seat shells:** hold cover 3 such that retaining lug 1 is pointing towards rear seat anchorage 2.
- Insert cover 3 into rear seat anchorage 2 by pushing it downwards at an angle and then clip it to the seat shell.
- After removing the rear bench seats, ensure that the rear bench seats stand firmly and cannot tip over when in storage.

Please note that the metallic seat support in the vehicle floor will heat up during a journey if the rear seating has been removed.

Installing the rear bench seat

Warning notice on the rear bench seat

Secure engagement of the rear bench seat is guaranteed only if the seat anchorages are kept clean and free of objects.

ⓘ In vehicles registered as passenger vehicles, observe the maximum permitted number of seats.

- Remove the covers of the seat shells as described under "Removing the rear bench seat".
- Ensure that there are no objects in the seat anchorages and seat shells.
- Position the bench seat behind the installation position.
- Hold the bench seat by the grab handles and tilt it backwards.
- Roll the bench seat forwards on the level plastic carriers.
- Ensure that the rear legs of the bench seat are engaged.

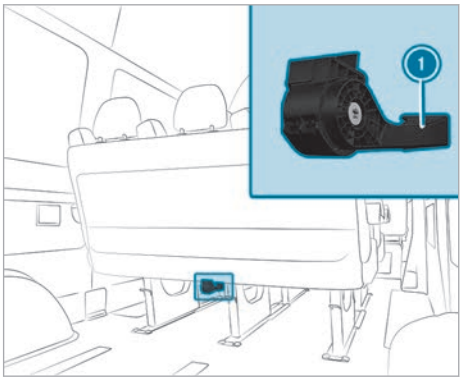

- Tilt the bench seat forwards firmly until the locks on the front legs of the bench seat engage audibly.
  The locks on the front legs of the bench seat will now be locked and the red indicator tabs on the housing of release handle (1) should no longer be visible.

ⓘ If the red indicator tabs on the release handle housing are visible, the bench seat is not correctly engaged.

If the bench seat is not correctly engaged, you can rectify this situation as follows:

- Unlock the bench seat again and tilt it forwards firmly until the locks on the bench seat front legs engage audibly.
- Attach the covers of the seat shells as described under "Removing the rear bench seat".

Adjusting the seat backrest of the rear bench seat

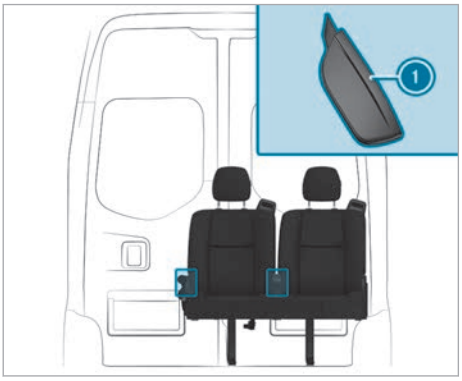

ⓘ If a partition is installed: the rear bench seat must not come into contact with the partition at any time.

- Move the seat backrest to the desired position.

Head restraints

Adjusting the head restraint manually

WARNING Risk of accident due to adjusting the vehicle settings while the vehicle is in motion

You could lose control of the vehicle in the following situations in particular:

- If you adjust the driver's seat, the head restraint, the steering wheel or the mirror while the vehicle is in motion
- If you fasten your seat belt while the vehicle is in motion

- Before starting the vehicle: in particular, adjust the driver's seat, head restraint, steering wheel and mirror, and fasten your seat belt.

WARNING Risk of injury due to head restraints not being installed or being adjusted incorrectly

If head restraints have not been installed or have not been adjusted correctly, there is an increased risk of injury in the head and neck area, e.g. in the event of an accident or when braking.

- Always drive with the head restraints installed.

▶ Before driving off, make sure for every vehicle occupant that the center of the head restraint supports the back of the head at about eye level.

Do not interchange the head restraints of the front and rear seats. Otherwise, you will not be able to adjust the heights and angles of the head restraints correctly.

Using the head restraint fore-and-aft adjustment, adjust the head restraint so that it is as close to the back of your head as possible.

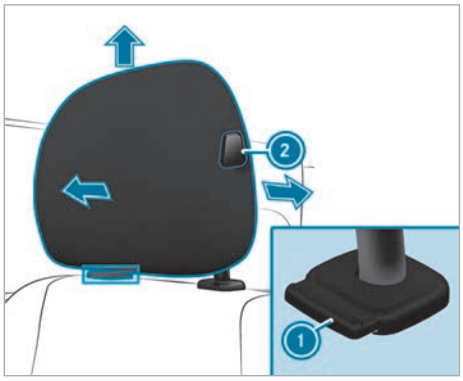

Head restraint (example of luxury head restraint on the driver's seat)

- ▶ **To raise:** pull the head restraint upwards into the desired position and ensure that it engages.
- ▶ **To lower:** press release knob 1, slide the head restraint downwards into the desired position and ensure that it engages.
- ▶ **To move forwards:** press release knob 2 and pull the head restraint forwards until it engages in the desired position.
- ▶ **To move backwards:** press release knob 2 and slide the head restraint backwards into the desired position.
- ▶ **To remove:** press release knob 1 and pull the head restraint up and out.
- ▶ **To install:** press the head restraint with detent on the left-hand side when viewed in the direction of travel into the holes until it engages.

Switching the seat heating on/off

⚠ **WARNING** Risk of burns due to repeatedly switching on the seat heating

Repeatedly switching on the seat heating can cause the seat cushion and seat backrest padding to become very hot.

In particular, the health of persons with limited temperature sensitivity or a limited ability to react to high temperatures may be affected or they may even suffer burn-like injuries.

▶ Do not repeatedly switch on the seat heating.

To protect against overheating, the seat heating may be temporarily deactivated after it is switched on repeatedly.

! **NOTE** Damage to the seats caused by objects or documents when the seat heating is switched on

When the seat heating is switched on, overheating may occur due to objects or documents placed on the seats, e.g. seat cushions or child seats. This could cause damage to the seat surface.

▶ Make sure that no objects or documents are on the seats when the seat heating is switched on.

Requirements:

- The power supply is switched on.

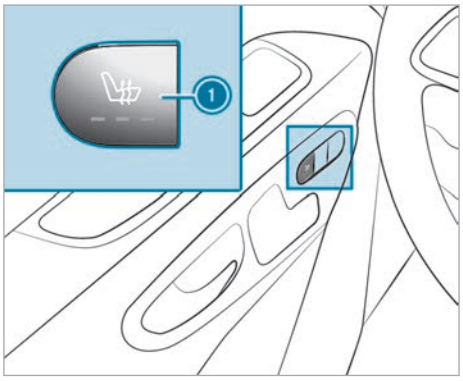

▶ **To switch on:** press the 1 button.
All indicator lamps on the button light up.

- **To lower the level:** press button ① until the required heating level is reached.
  Depending on the heating level, one to three indicator lamps will light up.
- **To switch off:** press button ① until all indicator lamps are off.

ⓘ The seat heater automatically switches back out of the three heating levels after 8, 10 and 20 minutes until the seat heater switches off.

Steering wheel

Adjusting the steering wheel

⚠ **WARNING** Risk of accident due to adjusting the vehicle settings while the vehicle is in motion

You could lose control of the vehicle in the following situations in particular:

- If you adjust the driver's seat, the head restraint, the steering wheel or the mirror while the vehicle is in motion
- If you fasten your seat belt while the vehicle is in motion

▶ Before starting the vehicle: in particular, adjust the driver's seat, head restraint, steering wheel and mirror, and fasten your seat belt.

⚠ **WARNING** Risk of accident due to unlocked steering wheel

The steering wheel may move unexpectedly if it is unlocked while the vehicle is in motion.

▶ Make sure that the steering wheel is locked before driving off.

▶ Never unlock the steering wheel when the vehicle is in motion.

⚠ **WARNING** Risk of entrapment for children when adjusting the steering wheel

Children could injure themselves if they adjust the steering wheel.

▶ Never leave children unattended in the vehicle.

▶ When leaving the vehicle, always take the SmartKey with you and lock the vehicle.

Adjusting the steering wheel

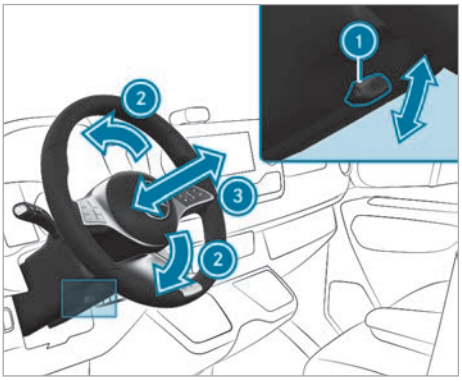

① Lever
② Steering column height
③ Steering column fore-and-aft adjustment

- **To unlock:** swing lever ① down as far as it will go.
  The steering wheel is unlocked.
- **To lock:** pull lever ① up as far as it will go.
  The steering wheel is locked.

Switching the steering wheel heater on/off

Requirements

- The vehicle is switched on.

The steering wheel heater can be switched on and off via a switch below the steering wheel.

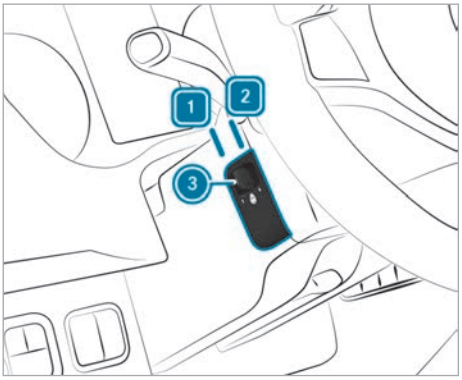

- **To switch on:** push the switch into position 1.
  If the indicator lamp ③ lights up, the steering wheel heater is switched on.
- **To switch off:** push the switch into position 2.

When you switch the vehicle off, the steering wheel heater will switch off.

Stowage areas

Overview of the front stowage compartments

Overview of the front storage compartments

Observe the notes on loading the vehicle (→ page 215).

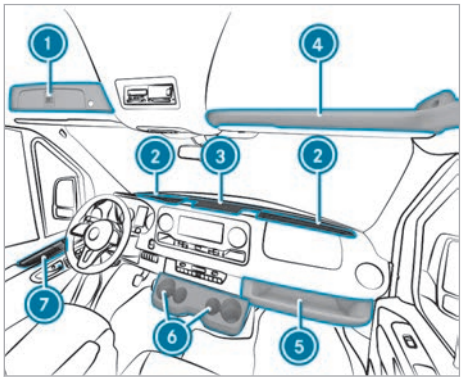

1. Lockable compartment above windshield (subject to a maximum load of 4 lb (2 kg))
2. Windshield storage compartment with two cup holders / ashtray stowage space

   Storage compartment with cover, depending on specification
3. Center console storage compartment with USB port, charging interface, NFC interface and 12 V socket
4. Storage compartment above windshield (subject to a maximum load of 5 lb (2.5 kg))
5. Front passenger side storage compartment (subject to a maximum load of 11 lb (5 kg))
6. Cup holder (→ page 82)
7. Storage compartment in the doors

Information about the bottle holder

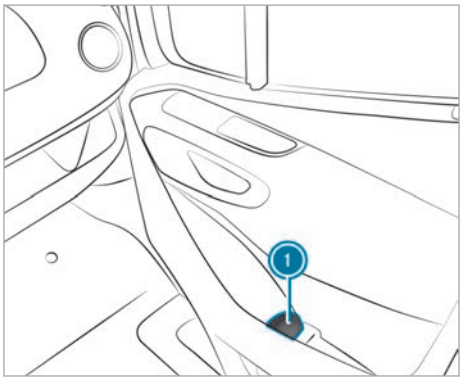

1. Bottle holder in the front doors (example: front passenger door)

Cup holder

Overview of cup holders in the center console

⚠ **WARNING** - Risk of accident or injury when using the cup holder while the vehicle is moving

The cup holder cannot secure containers while the vehicle is moving.

If you use a cup holder while the vehicle is moving, the container may be flung around and liquids may be spilled. The vehicle occupants may come into contact with the liquid and if it is hot, they could be scalded. You could be distracted from traffic conditions and you may lose control of the vehicle.

- ▶ Only use the cup holder when the vehicle is stationary.
- ▶ Only use the cup holder for containers of the right size.
- ▶ Close the container, particularly if the liquid is hot.

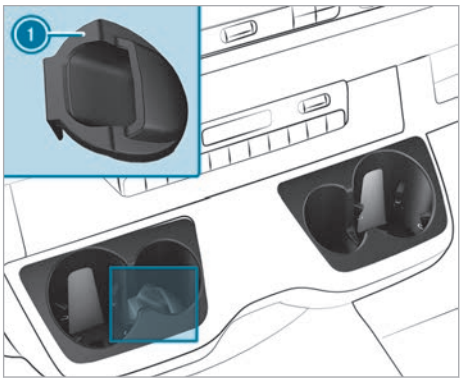

The cup holders for the driver and front passenger are in the center console.

Key holder ① for vehicles with a reduced antenna detection range (KEYLESS-START) is located in the driver's cup holder.

Opening the cup holder in the rear passenger compartment

WARNING Risk of injury due to cup holder being extended when exiting the vehicle

You may bump into the cup holder.

▶ Before getting out of the vehicle, push the cup holder back under the rear bench seat.

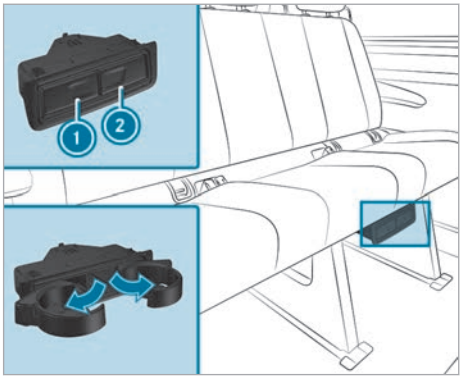

▶ **To open:** press on cup holder ① or ②.

▶ Fold out the cup holder.

▶ **To close:** slide cup holder ① or ② back in until it engages.

Ashtray and cigarette lighter

Using ashtrays

▶ Place the closed ashtray in a cup holder in the stowage compartments near the windshield.

▶ Check that the ashtray is seated securely.

ⓘ Do not place the ashtray in the center console cup holders. It cannot sit securely there.

Using the cigarette lighter in the center console

WARNING Risk of fire and injury from hot cigarette lighter

You can suffer burns if you touch the hot heating element or the hot socket of the cigarette lighter.

In addition, flammable materials can catch fire if:

- you drop the hot cigarette lighter.
- children e.g. hold the hot cigarette lighter to objects.

▶ Always hold the cigarette lighter by the knob.

▶ Always make sure that the cigarette lighter is out of the reach of children.

▶ Never leave children unattended in the vehicle.

Requirements:

- The vehicle is switched on.

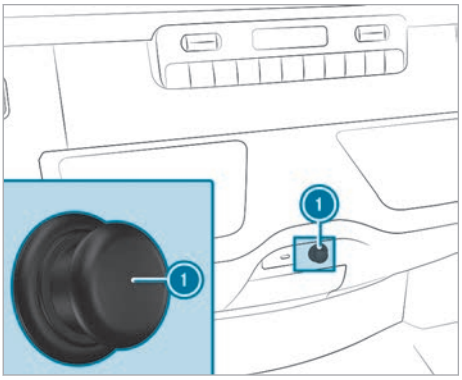

▶ Press on the cigarette lighter ①.
The cigarette lighter will pop out when the heating element is red-hot.

Sockets

Using 12 V sockets

Requirements:
- Only devices with a maximum power consumption of 180 W (15 A) may be connected.

12 V socket in the storage compartment

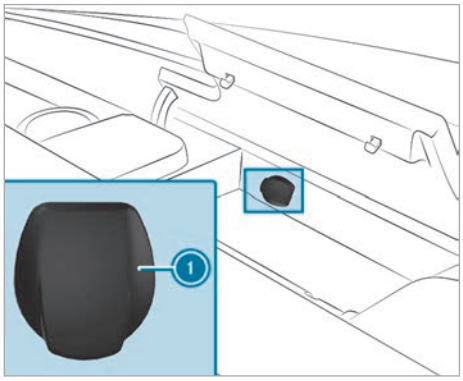

▶ Open the lid of the storage compartment in the center console.

▶ Fold up cover (1) of the socket.

▶ Insert the plug of the device.

ⓘ Depending on the vehicle equipment, the vehicle has additional 12 V sockets:
- in the lower control panel in the front center console
- in the driver's seat
- in the cargo compartment

Notes on the 115 V socket

NOTE Damage to the auxiliary battery due to full discharge

The auxiliary battery may become damaged if a device with too high a power output is connected when you leave the vehicle, or the auxiliary battery's charge level is low.

▶ Only connect devices up to a maximum of 150 W.

▶ Do not leave devices connected for longer than four hours.

Vehicles with an auxiliary battery have a run-on function. If you leave the vehicle, you can charge devices over a period of up to four hours. If the vehicle is switched on and off again during the run-on period, the run-on function starts again for another four hours.

Using the 115 V socket in the center console

DANGER Risk of fatal injuries due to a damaged connecting cable or a damaged socket

You could receive an electric shock if the connecting cable or the 115 V power socket is pulled out of the trim or is damaged or wet.

▶ Use only connecting cables that are dry and free of damage.

▶ When the vehicle is switched off, make sure that the 115 V power socket is dry.

▶ Immediately have the 115 V power socket checked or replaced at a qualified specialized workshop if it is damaged or has been pulled out of the trim.

▶ Never plug the connecting cable into a 115 V power socket that is damaged or has been pulled out of the trim.

DANGER Risk of death due to using the socket incorrectly

In particular, you could receive an electric shock:
- If you touch the inside of the socket
- If you insert unsuitable devices or objects into the socket

▶ Do not touch the inside of the socket.

▶ Only connect suitable devices to the socket.

DANGER Risk of fatal injuries due to electric shock

If you clean the 115 V socket with a wet cloth, you can get an electric shock.

There is a risk of fatal injury!

▶ Avoid the area around the 115 V socket when cleaning.

Requirements

- Only connect devices with a suitable plug which conforms to the standards specific to the country you are in.
- Only connect devices up to a maximum of 150 W.
- Do not use multiple socket outlets.

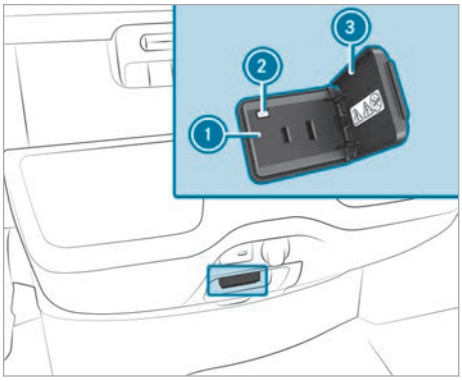

▶ Open flap ③.

▶ Insert the plug of the device into 115 V socket ①.
When the on-board electrical system voltage is sufficient, indicator lamp ② lights up.

If you will not be using the 115 V power socket, keep the flap ③ closed.

Charging a mobile phone using the USB port in the rear passenger compartment

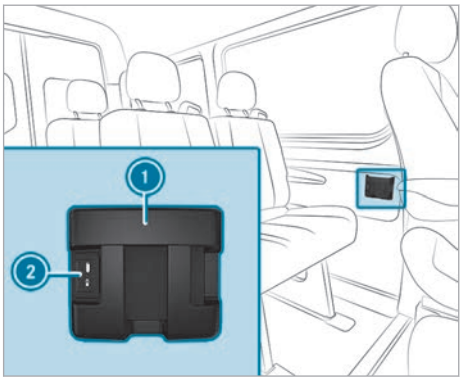

▶ Place the mobile phone in storage compartment ① and connect it to USB port ② to charge.

Wirelessly charging the mobile phone and coupling with the exterior antenna

Notes on wirelessly charging the mobile phone

⚠ **WARNING** Risk of injury due to objects being stowed incorrectly

If objects in the vehicle interior are stowed incorrectly, they may slide or be thrown around and hit vehicle occupants. In addition, cup holders, open stowage spaces and mobile phone receptacles will not always be able to retain all objects that they contain in the event of an accident.

There is a risk of injury, particularly in the event of braking maneuvers or abrupt changes in direction.

▶ Always stow objects such that they cannot be thrown around in such situations.

▶ Always make sure that objects do not protrude from stowage spaces, parcel nets or stowage nets.

▶ Close the lockable stowage spaces before starting a journey.

▶ Stow and secure objects that are heavy, hard, pointed, sharp-edged, fragile or too large in the cargo compartment.

Observe the notes on loading the vehicle (→ page 215).

⚠ **WARNING** Risk of fire from placing items in the mobile phone tray during charging

Placing additional items in the mobile phone tray during charging creates a risk of fire. That is particularly true if these are metal items.

▶ Do not place any items in the mobile phone tray during charging, especially no metal items such as coins, for example.

! **NOTE** Damage to objects caused by placing them in the mobile phone storage compartment

If objects are placed in the mobile phone storage compartment, these may be damaged by electromagnetic fields.

▶ Do not place credit cards, storage media, ski passes or other objects sensitive to electromagnetic fields in the mobile phone storage compartment.

NOTE Damage to the mobile phone stowage compartment caused by liquids

If liquids enter the mobile phone stowage compartment, the compartment may be damaged.

▶ Ensure that no liquids enter the mobile phone stowage compartment.

Observe the following notes on wireless charging:

- The charging function is only available when the drive system has been started.
- In some cases, it may not be possible to charge small mobile phones at every position of the mobile phone compartment.
- It may not be possible to charge large mobile phones that do not rest in the mobile phone receptacle.
- The mobile phone can warm up during the charging process. This depends on the applications (apps) currently running.
- For more efficient charging, the protective case should be removed from the mobile phone. Protective cases designed for wireless charging are an exception.
- When charging, the mat should be used if possible.

Charging the mobile phone wirelessly in the front

- Observe the notes on loading the vehicle (→ page 215).

Requirements

- The mobile phone must be suitable for wireless charging.

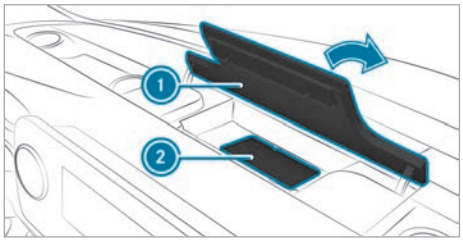

▶ Open the flap of storage compartment ① above the media display.

▶ With the display facing upwards, place the mobile phone as centrally as possible on the marked surface of mat ②.
When the charging symbol is shown in the multimedia system, the mobile phone is being charged.

Malfunctions during charging are shown in the media display of the multimedia system.

ⓘ The mat can be removed for cleaning, e.g. using clean, lukewarm water.

Installing and removing the floor mats

WARNING Risk of accident due to objects in the driver's footwell

Objects in the driver's footwell may impede pedal travel or block a depressed pedal.

This will jeopardize the operating- and road safety of the vehicle.

▶ Stow all objects in the vehicle securely so that they cannot get into the driver's footwell.

▶ Make sure that there is always sufficient clearance for the pedals.

▶ Always install the floor mats securely and as prescribed.

▶ Do not use loose floor mats and do not place floor mats on top of one another.

Installing

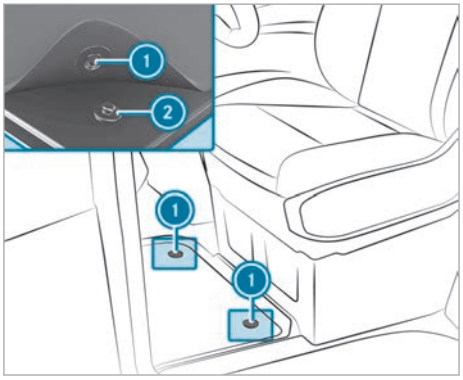

▶ Slide the seat backwards.

▶ Position the floor mat in the footwell so that it fits flush.

▶ Press studs ① onto holders ②, if applicable.

- Connect the installed driver and passenger footwell floor mats at the contact area.
- Adjust the seat.

Removing

- Slide the corresponding seat backwards and pull the floor mat off holders ②, if applicable.
- Remove the floor mat.

Lighting

Notes on adjusting the lights when driving abroad

Vehicles with halogen or static LED headlamps: Changing the headlamps is not necessary. The legal requirements will also be fulfilled in countries with left- and right-hand traffic.

Information about lighting systems and your responsibility

The vehicle's various lighting systems are only aids. The vehicle driver is responsible for adjusting the vehicle's lighting to the prevailing light, visibility, statutory conditions and traffic conditions.

Light switch

Operating the light switch

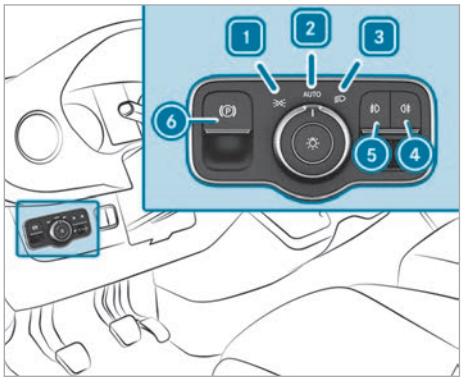

- 1 Activates or deactivates sidelights and license plate and instrument lighting.
- 2 AUTO Activates or deactivates automatic driving lights/daytime running lights (preferred light switch position).
- 3 Activates or deactivates low beam/high beam.
- 4 Activates or deactivates rear fog light.
- 5 Activates or deactivates front fog light.
- 6 Applies or releases the electric parking brake (→ page 143).

ⓘ If you hear a warning tone when exiting the vehicle, the lights may still be on.

ⓘ The turn signal light, the high beam and the high-beam flasher are operated with the combination switch (→ page 89).

ⓘ Leaving the sidelights on for several hours will drain the battery.
If the battery is heavily discharged, the sidelights will switch off automatically to enable the next vehicle start.

Automatic driving lights function

⚠ **WARNING** Risk of accident when the low beam is switched off in poor visibility

When the light switch is set to AUTO, the low beam may not be switched on automatically if there is fog, snow or other causes of poor visibility such as spray.

▶ In such cases, turn the light switch to .

The automatic driving lights are only an aid. Responsibility for vehicle lighting rests with you. Turn the light switch from AUTO to immediately in the event of fog, snow or spray. Otherwise, the driving lights will be temporarily interrupted.

To switch the automatic driving lights on:

- Turn the light switch to the AUTO position. Switch the power supply on: the side lights will automatically switch on or off depending on the brightness of the ambient light.

  The daytime running lights will be switched on when the vehicle is started. The side lights and the low beam will also switch on or off depending on the brightness of the ambient light.

  When the low beam is switched on, the indicator lamp on the instrument cluster will also switch on.

Activating/deactivating the fog lights

Requirements

- The light switch is in the or AUTO position.
- The vehicle has been switched on or started.

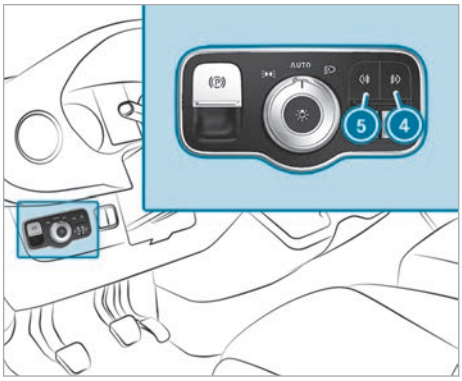

- **To switch the front fog light on or off:** press the button 5.
- **To switch the rear fog light on or off:** press the button 4.

Observe the country-specific regulations for using the rear fog lamp.

Adjusting headlamp range

Requirements

- The vehicle has been started.

You can use the headlamp range adjuster to adjust the light cone of the headlamps to the vehicle's load condition. When the seats are occupied or the load compartment is laden or unladen, the light cone will change. This may cause visibility conditions to deteriorate and you could dazzle oncoming traffic.

In vehicles with LED headlamps, the headlamp range will be adjusted automatically.

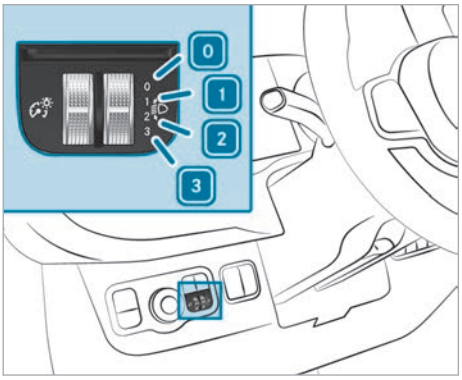

0 Driver's seat and front passenger seat occupied

1 Driver's seat, front passenger seat and rear seats occupied

2 Driver's seat, front passenger seat and rear seats occupied, load compartment or loading area laden

3 Driver's seat and front passenger seat occupied and maximum permissible rear axle load utilized

- Turn the headlamp range adjuster to the corresponding position.
  The road illumination should be 131.2 ft (40 m) to 328.1 ft (100 m) and the low beam must not dazzle oncoming traffic.
- If the vehicle is unladen, select position 0.

Operating the combination light switch

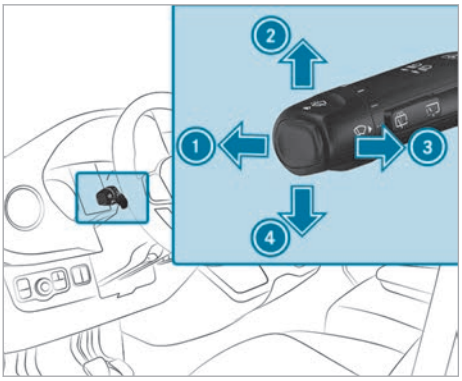

1 High beam

2 Right turn signal light

③ High-beam flasher
④ Left turn signal light

▶ Use the combination switch to select the desired function.

Switching on high beam

▶ Switching on the low beam (→ page 88).

▶ Push the combination switch forwards ①. The [≡D] indicator lamp on the instrument cluster will light up. The combination switch will return to its starting position.

ⓘ The high beam will only switch on in position [AUTO] if it is dark and the vehicle is switched on.

▶ **To switch off:** push the combination switch forwards ① or briefly pull it in the direction of arrow ③ (the high-beam flasher switches high beam off).
The [≡D] indicator lamp on the instrument cluster will go out. The combination switch will return to its starting position.

ⓘ **Vehicles with HighBeam Assist:** HighBeam Assist regulates switching of the high beam on and off while it is active (→ page 91).

High-beam flasher

▶ Briefly pull the combination switch in the direction of the arrow ③.

Turn signal lights

▶ **To indicate:** push the combination switch in the required direction ② or ④ until it engages. When significant steering movements are made, the combination switch will automatically reset itself.

▶ **Short indication:** briefly tap on the combination switch in the desired direction ② or ④. The corresponding turn signal lamp will flash three times.

Switching the hazard warning light system on/off

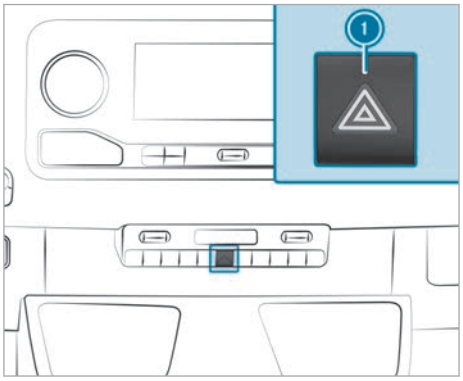

▶ Press button ①.

If you operate a turn signal indicator while the hazard warning light system is switched on, only the turn signal lamps on the relevant side of the vehicle will light up.

ⓘ The hazard warning light system will work even when the vehicle has been switched off.

Cornering light function

The cornering light improves the illumination of the road over a wide angle in the turning direction, e.g. enabling better visibility in tight bends.

The function is active under the following conditions:

- The speed is less than 37 mph (60 km/h) and the indicator has been switched on or the steering wheel is turned.
- The speed is between 37 mph (60 km/h) and 50 mph (80 km/h) and the steering wheel is turned.

The cornering light may still light up for a short time but will be switched off automatically after a maximum of three minutes.

ⓘ When reverse gear is engaged, the lighting switches to the opposite side.

Highbeam Assist

Adaptive Highbeam Assist function

⚠ **WARNING** Risk of accident despite Adaptive Highbeam Assist

Adaptive Highbeam Assist does not react to:

- Road users without lights, e.g. pedestrians
- Road users with poor lighting, e.g. cyclists
- Road users whose lighting is obstructed, e.g. by a barrier

On very rare occasions, Adaptive Highbeam Assist may fail to recognize other road users with their own lighting, or may recognize them too late.

In these, or in similar situations, the automatic high beam will not be deactivated or will be activated despite the presence of other road users.

▶ Always observe the road and traffic conditions carefully and switch off the high beam in good time.

The Adaptive Highbeam Assist automatically switches between the following settings:

- Low beam
- High beam

The system detects that vehicle lights are approaching in the opposite direction or driving ahead of the vehicle.

At speeds greater than 19 mph (30 km/h), the system will switch to the following setting:

- If no other road users are detected, high beam will switch on automatically.

At speeds lower than 16 mph (25 km/h) or if there is sufficient street lighting, the system will switch to the following setting:

- High beam will automatically switch off.

System limits

Adaptive Highbeam Assist cannot take the road, weather or traffic conditions into consideration.

The detection of obstacles may be restricted if:

- visibility is poor, e.g. in fog, heavy rain or snow.
- the sensors are dirty or covered.

Adaptive Highbeam Assist serves solely as an aid. You are responsible for ensuring correct vehicle lighting in accordance with the prevailing light, visibility and traffic conditions.

The system's optical sensor is located behind the windshield near the overhead control panel.

Switching Highbeam Assist on/off

Requirements

- The light switch is in the AUTO position.

▶ **To switch on:** switch on high beam using the combination switch.
When the high beam is switched on automatically in the dark, the indicator lamp will light up on the instrument cluster display.

▶ **To switch off:** switch off high beam using the combination switch.

Setting the exterior lighting switch-off delay time

Requirements:

- The light switch is in the AUTO position.

Multimedia system:

⟶ ⌂ ▸▸ Settings
▸▸ Light ▸▸ Interior/Exterior Lighting
▸▸ Exterior Lighting Switch-off Delay

▶ Set a switch-off delay time.

When the vehicle is switched off, the exterior lighting will be activated for the set time.

Activating and deactivating the surround lighting

Multimedia system:

⟶ ⌂ ▸▸ Settings
▸▸ Light ▸▸ Interior/Exterior Lighting
▸▸ Surround Lighting

▶ Activate or deactivate the function.

The surround lighting will remain on for 40 seconds after the vehicle is unlocked. When you start the vehicle, the surround lighting will be deactivated and the automatic driving lights activated.

Adjusting the interior lighting

Adjusting the interior lighting

Depending on the respective vehicle equipment, certain buttons may be unavailable or unassigned.

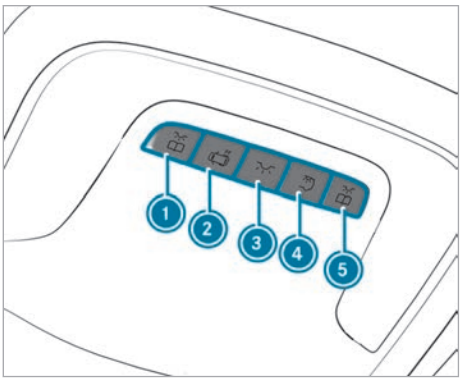

- 1 Switches the front-left reading lamp on/off
- 2 **To switch off the automatic interior lighting control:** press the button .

  Otherwise, the interior lighting is switched on automatically, whereby, for example:
  - you unlock the vehicle
  - you open a door
- 3 Switches the (front) interior lighting on/off.
- 4 Switches the rear passenger compartment/load compartment lighting on/off.
- 5 Switches the front-right reading lamp on/off

Setting the interior lighting for ABH[1] add-on equipment

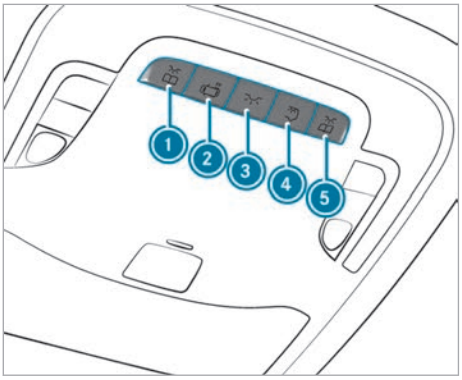

[1] ABH = Body manufacturer

- **To switch the front left reading lamp on/off:** press the button 1.
- **To deactivate automatic interior lighting control:** press the button 2.

  Otherwise, the interior light control switches on automatically, whereby, forexample:
  - you unlock the vehicle
  - you open a door
- **To switch the front interior lighting on/off:** press the button 3.
- **To switch body manufacturer lamps on/off:** press the button 4 (not assigned depending on the respective vehicle equipment).
  - Your vehicle may be equipped with a functional feedback system: will light up in red if the body manufacturer lamps are switched on.
  - If the body manufacturer lamps have been switched on manually, they will also remain switched on for an extended period of time after locking.

ⓘ This period of time is shortened if there is undervoltage in the starter battery.

ⓘ If the body manufacturer lamps have been switched off automatically to protect the battery, restart the vehicle before switching them on again.

ⓘ The body manufacturer lamps can be switched on only when the battery voltage is stable.

- **To switch the front right reading lamp on/off:** press the button 5.

Setting the interior lighting for bus interior light control

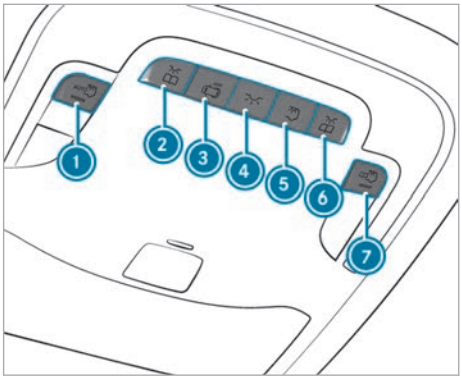

1. Activates/deactivates the bus function
2. Switches the front left reading lamp on/off
3. Activates/deactivates automatic interior lighting control
4. Switches the front interior lighting on/off
5. Switches passenger compartment lighting on/off
6. Switches the front right reading lamp on/off
7. Enables/disables reading lighting in the passenger compartment

▶ **To activate the bus function:** press the button 1.
The LED lights up.

The bus function will be in one of the following modes:

- **Stop mode**
  If the vehicle comes to a standstill at a stop, forexample, and the passenger door opens, the passenger compartment will be illuminated (undimmed).
- **Driving mode**
  If all doors are closed and the vehicle is traveling faster than walking pace, the passenger compartment will be illuminated (dimmed).
- **Automatic off mode**
  If automatic interior lighting control 3 is deactivated, thereby activating automatic off mode, the passenger compartment will be continuously illuminated (dimmed).

If the bus function is activated, the modes can be offset via the button 5 that switches passenger compartment lighting on/off. Passenger compartment lighting will then be deactivated completely. When the button 5 is pressed again to switch passenger compartment lighting on/off, the bus function will once again adopt one of the modes.

- If automatic interior lighting control 3 was previously activated, automatic off mode will be rendered inactive once again.
- If automatic off mode was not previously activated, either driving mode or stop mode will be active.

ⓘ The bus function can be operated independently of the button 5 that switches passenger compartment lighting on/off. The passenger compartment lighting must not be switched on beforehand.

▶ **To deactivate the bus function:** press the button 1.
The LED will not light up.

▶ **To switch the front left reading lamp on/off:** press the button 2.

▶ **To deactivate automatic interior lighting control:** press the button 3.
The interior lighting control will switch on automatically if, forexample:

- you unlock the vehicle
- you open a door

▶ **To switch the front interior lighting on/off:** press the button 4.

▶ **To switch passenger compartment lighting on/off:** press the button 5.

▶ **To switch the front right reading lamp on/off:** press the button 6.

▶ **To enable reading lighting in the passenger compartment:** press the button 7.
The LED lights up.

Passengers will be able to switch the reading lamps on and off.

▶ **To deactivate reading lighting in the passenger compartment:** press the button 7.
The LED will not light up.

Passengers will no longer be able to operate the reading lamps.

Switching the rear interior lighting on/off

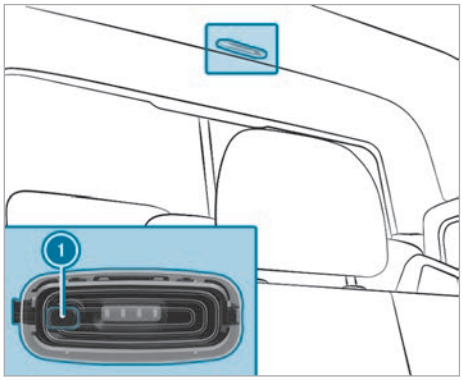

▶ ① Switches rear interior/cargo compartment lamp on or off

Motion detector

WARNING Risk of injury due to laser beam of the motion detector

The motion detector emits non-visible radiation from LEDs that are classified as class 1M lasers.

This may damage the retina in the following situations:

- If you look directly into the unfiltered laser beam of the motion detector for an extended period.
- If you look directly into the laser beam of the motion detector with optical instruments, such as glasses or magnifying glasses.

▶ Never look directly into the motion detector.

The motion detector is located in the load compartment behind the partition, in the middle of the roof.

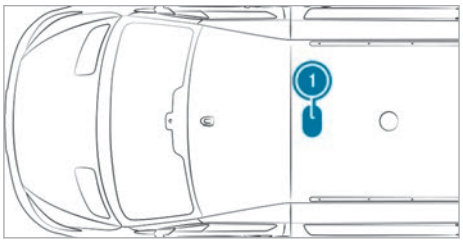

① Position of motion detector

If the vehicle is equipped with a motion detector, the load compartment lighting is also activated via the motion detector.

If the motion detector detects movement in the load compartment while the vehicle is stationary, the load compartment lighting will switch on for approximately two minutes.

The load compartment lighting will be switched on via the motion detector in the following situations:

- The vehicle is stationary, the parking brake is applied and you are not depressing the brake pedal.
- **Vehicles with automatic transmission:** the selector lever is in position P and you are not depressing the brake pedal.
- The vehicle has not been locked from the outside using the key.

If no change to the vehicle (e.g. a door opening) is detected over several hours, the motion detector will automatically switch off. This prevents the battery from discharging.

Switching the interior lighting switch-off delay time on/off

Multimedia system:

→ ⌂ ▸▸ Settings
▸▸ Light ▸▸ Interior/Exterior Lighting
▸▸ Interior Lighting Switch-off Delay

▶ Activate or deactivate the function.
If this function is active, the interior lighting will be switched on for a short time after the end of the journey.

Changing bulbs

Instructions for replacing illuminants

WARNING Risk of burns from hot component parts whilst replacing a bulb

Bulbs, lamps and plug connectors can become very hot during operation.

When replacing a bulb, you could burn yourself on these component parts.

▶ Allow the component parts to cool down before replacing the bulbs.

Important safety notes

- Before changing the bulbs, switch off the vehicle's lighting system. This will prevent a short circuit.
- Use only spare bulbs of the same type and with the correct voltage.
- Use bulbs only in enclosed lamps that have been specifically designed to house them.
- Do not use any illuminant that has been dropped or has scratches on its glass tube. Otherwise, the illuminant may explode.
- The illuminant may explode under the following conditions:
  - if it is hot and you touch it
  - if you drop it
  - if you scratch it
- Stains on the glass tube will reduce the service life of the illuminant. Do not touch the glass tube with your bare hands. If necessary, clean the glass tube with alcohol or spirits while it is cold and wipe it down with a lint-free cloth.
- Protect illuminants from humidity and do not bring them into contact with liquids.

Always ensure the bulbs are firmly secured.

If your vehicle is equipped with LED modules, you can check this as follows: the light cone will move from top to bottom and back again when the vehicle starts. For this to work, low beam needs to have been switched on before the vehicle is started.

Bulbs and lamps are major elements in vehicle safety. Therefore, ensure that they are always working. Have the headlamp adjustment checked regularly.

If the new illuminant also does not light up, consult a qualified specialist workshop.

Replacing front light bulbs (vehicles with halogen headlamps)

Overview of illuminant types

You can replace the following light sources.

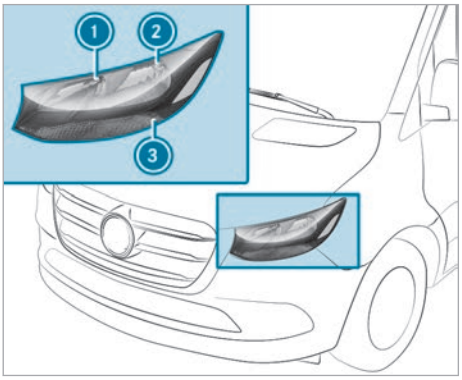

Halogen headlamps

1. High beam/daytime running lights: H15 55 W/15 W
2. Low beam/perimeter light: H7 55 W/W 5 W
3. Turn signal light: 3457 NAK 28 W

Replacing illuminants in the halogen headlamp

Requirements

- **Low beam:** illuminant type H7 55 W
- **High beam/daytime running lights:** illuminant type H15 55 W/15 W
- **Perimeter lights:** illuminant type W 5 W
- **Turn signal lights:** illuminant type 3457 NAK 28 W

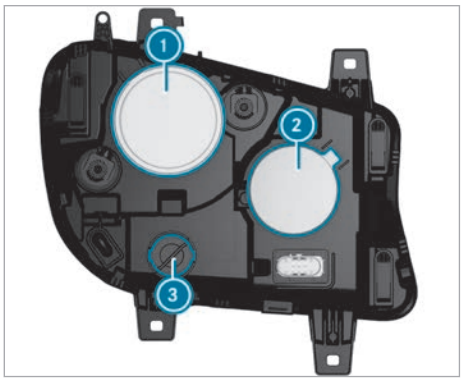

1 Low beam/perimeter light housing cover
2 High beam/daytime running lights housing cover
3 Turn signal light socket

- Switch off the lighting system.
- **Low beam/perimeter light:** pull the housing cover 1 rearward to remove it.
- Pull the socket rearward to remove it.
- Remove the illuminant from the socket.
- Insert the new illuminant into the socket so that the base of the bulb rests fully against the base of the socket.
- Align and insert the socket.
- Attach the housing cover 1.
- **High beam/daytime running lights:** pull the housing cover 2 rearward to remove it.
- Turn the socket counter-clockwise and pull it out.
- Remove the illuminant from the socket.
- Insert the new illuminant into the socket so that the base of the bulb rests fully against the base of the socket.
- Insert the socket and turn it clockwise.
- Attach the housing cover 2.
- **Turn signal light:** turn the socket 3 counter-clockwise and remove.
- Gently turn the illuminant counter-clockwise and take it out of the socket.
- Insert the new illuminant into the socket and turn it clockwise.
- Insert the socket 3 and turn it clockwise.

Additional turn signal light

Requirements
- **Additional turn signal light (all-wheel drive vehicles):** bulb type P 21 W

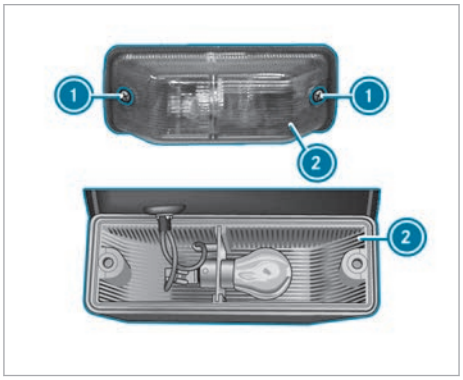

- Switch off the lighting system.
- Unscrew screws 1 and remove light lens 2.
- Gently turn the illuminant counter-clockwise and take it out of the socket.
- Insert the new illuminant into the socket and turn it clockwise.
- Position light lens 2 and tighten screws 1 .

Replacing rear illuminants (Cargo Van and Tourer)

Overview of rear illuminant types (panel van and Tourer)

You can replace the following illuminants.

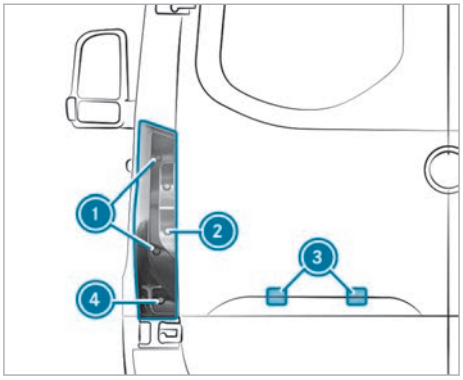

Vehicles with standard tail lamps

1 Brake lights/tail lights/perimeter lights: P 21 W

② Reversing light: P 21 W
③ License plate lighting: W 5 W
④ Rear fog light: P 21 W

You can replace the following illuminants.

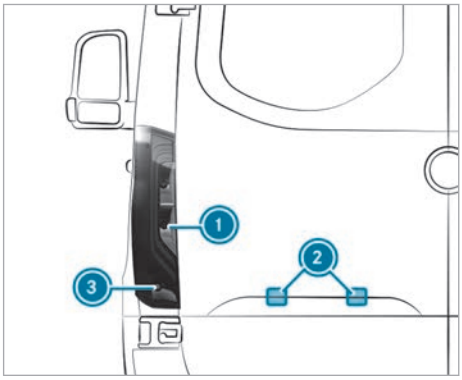

Vehicles with partial LED tail lamps
① Reversing light: P 21 W
② License plate lighting: W 5 W
③ Rear fog light: P 21 W

Replacing tail lamps (Cargo Van and Tourer)

Requirements:
- **Brake light/tail light/perimeter light:** illuminant type P 21 W
- **Backup lights:** illuminant type P 21 W
- **Rear fog light:** illuminant type P 21 W

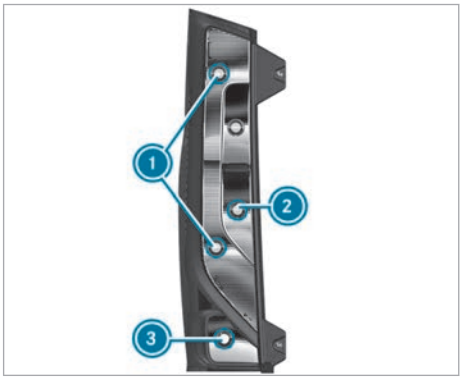

① Brake light/tail light/perimeter light
② Backup lights
③ Rear fog light

▶ Switch off the lighting system.

▶ Open the rear-end door.

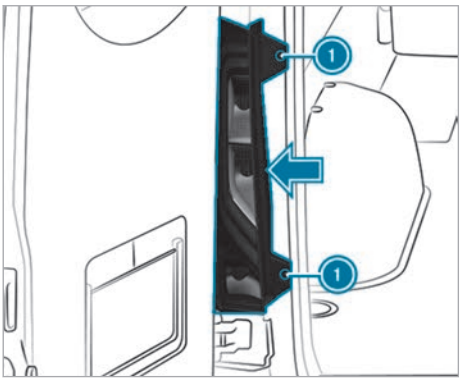

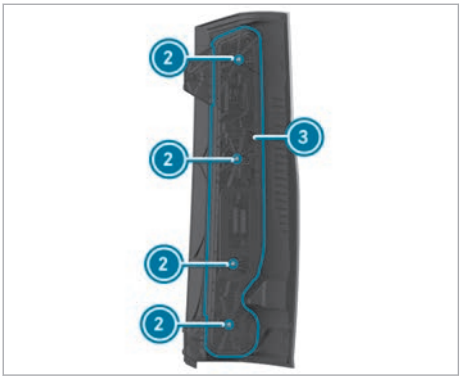

▶ **To remove:** loosen screws ① and pull out the tail lamp in the direction of the arrow.
▶ Remove the plug from bulb mount ③.
▶ Loosen screws ② and remove bulb mount ③ from the tail lamp.
▶ Gently turn the illuminant counter-clockwise and take it out of the socket.
▶ Insert the new illuminant into the socket and turn it clockwise.
▶ **To install:** set bulb mount ③ on the tail lamp and screw in screws ②.
▶ Press the plug into bulb mount ③.
▶ Insert the tail lamp and screw in screws ①.

Replacing the license plate lighting

Requirements
- **License plate lighting:** illuminant type W 5 W

- Switch off the lighting system.
- Place a screwdriver, forexample, into the opening ② between the lamp ③ and the panel ① and carefully pry off the lamp ③.
- Remove the lamp ③ from the panel ①.
- Rotate the bulb holder approx. 45° and detach it from the lamp.
- Remove the illuminant .
- Insert the new illuminant into the bulb holder.
- Insert the bulb holder into the lamp and rotate it approx. 45°.
- Insert the lamp into the panel opening until it engages.

Replacing rear illuminants (chassis)

Overview of rear light source types (chassis)

You can replace the following light sources.

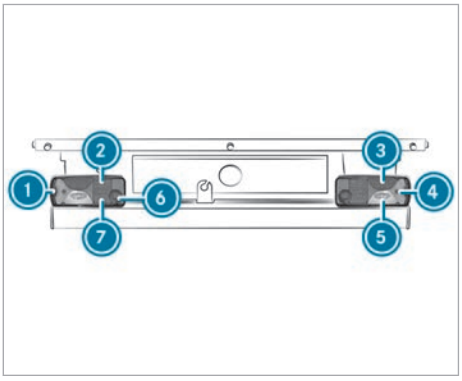

Vehicles with standard tail lamps
① Clearance lamp: R 5 W
② Tail light: R 5 W
③ Brake light: P 21 W
④ Turn signal light: PY 21 W
⑤ Backup lamp: P 21 W
⑥ Rear fog light (driver's side): P 21 W
⑦ License plate lamp: R 5 W

Replacing the tail lamps on the chassis

Requirements:
- **Rear fog lights:** light source type P 21 W
- **License plate lamp:** light source type R 5 W
- **Backup lamp:** light source type P 21 W
- **Turn signal lights:** light source type PY 21 W
- **Clearance lamps:** light source type R 5 W
- **Brake lights:** light source type P 21 W
- **Tail lights:** light source type R 5 W

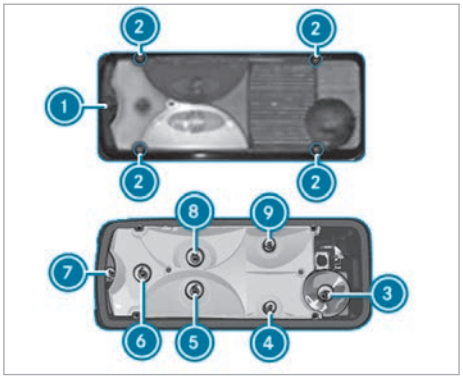

① Light lens
② Screws
③ Rear fog light
④ License plate lamp
⑤ Backup lamp
⑥ Turn signal light
⑦ Clearance lamp
⑧ Brake light
⑨ Tail light

- Switch off the lighting system.
- Unscrew screws ② and remove light lens ①.
- Remove the plug from the bulb mount.
- Gently turn the light source counter-clockwise and take it out of the socket.
- Insert the new light source into the socket and turn it clockwise.
- Position light lens ① and tighten screws ② .

Replacing interior light bulbs

Replacing rear interior lamps

Requirements

ⓘ For the standard bulb failure indicator function to work correctly, only light bulbs that are the same type and power as those installed during production may be used.

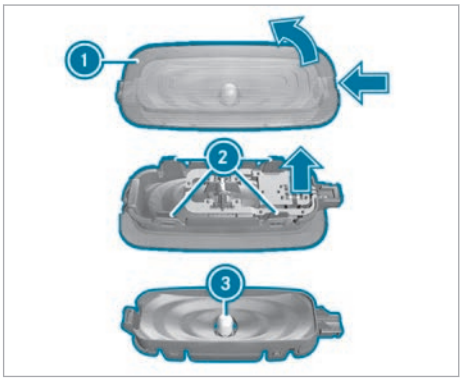

- Switch off the interior lighting.
- Press in the catch spring of lens ① with a suitable object, e.g. a screwdriver, and then lever off the lens with the lamp housing.
- **To remove the lens from the lamp housing:** press the lugs of lens ② inwards.
- Remove light bulbs ③ from the lamp housing.
- Insert the new light bulb.
- Position the lens on the lamp housing and engage it.
- Align the lens with the lamp housing and engage it.

Windshield wipers

Switching the windshield wipers on and off

Requirements:

- The power supply is switched on.

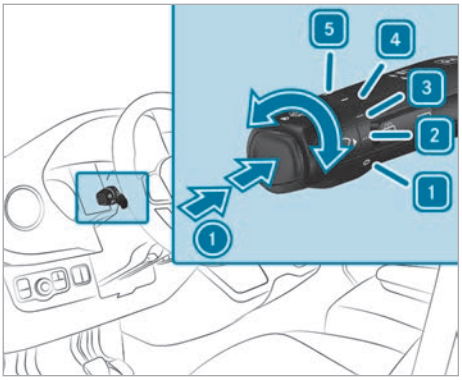

① Single wipe/wiping with washer fluid
1 0 Windshield wipers off
2 • • • Intermittent wiping, normal
Vehicles with rain sensors: automatic wiping, normal
3 • • • • Intermittent wiping, frequent
Vehicles with rain sensors: automatic wiping, frequent
4 — Continuous wiping, slow
5 = Continuous wiping, fast

- Turn the combination switch to the corresponding position 1 – 5.
- **Single wipe:** press button ① on the combination switch in the direction of arrow as far as the first pressure point.
- **Washing:** press button ① on the combination switch in the direction of arrow as far as the second pressure point.

Switching the rear window wiper on and off

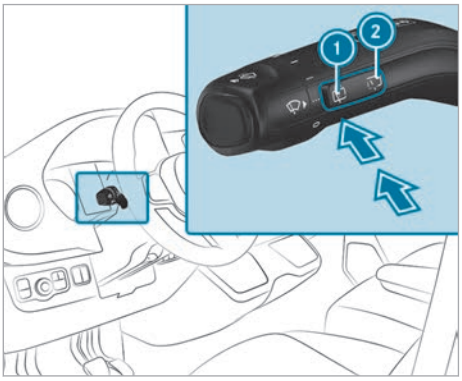

① Single wipe/wash
② Intermittent wiping

- **Single wipe:** press button ① to the pressure point.
- **Wiping with washer fluid:** press button ① beyond the pressure point.
- **To switch intermittent wiping on or off:** press button ②.
  The symbol will appear on the instrument cluster when the rear window wiper is switched on.

Replacing the windshield wiper blades

WARNING Risk of becoming trapped if the windshield wipers are switched on while wiper blades are being replaced

If the windshield wipers begin to move while you are changing the wiper blades, you can be trapped by the wiper arm.

- Always switch off the windshield wipers and vehicle before changing the wiper blades.

WARNING Risk of injury from using the windshield wipers when the hood is open

If the windshield wipers start moving when the hood is open, you could be trapped by the wiper linkage.

- Always switch off the windshield wipers and vehicle before opening the hood.

Replacing the wiper blades

ⓘ If the wiper blades are worn out, they will no longer wipe the windshield properly. Replace the wiper blades twice a year, preferably in spring and fall.

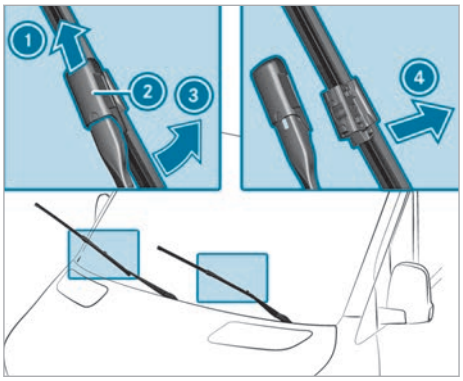

- Fold the wiper arm away from the windshield.
- Hold wiper arm and fold the wiper blade away from wiper arm in the direction of arrow ③ as far as it will go.
- Slide catch ② upwards in the direction of arrow ① until it engages.
- Fold the wiper blade back onto the wiper arm.
- Remove the wiper blade from the wiper arm in the direction of arrow ④.
- Insert new wiper blade in the holder on wiper arm.

When doing so, take into account the different lengths of the wiper blades:

- Driver's side: long wiper blade
- Front passenger side: short wiper blade

- Slide catch ② downwards until it engages.
- Fold wiper arm back onto the windshield.

Replacing the windshield wiper blades (WET WIPER SYSTEM)

WARNING Risk of becoming trapped if the windshield wipers are switched on while wiper blades are being replaced

If the windshield wipers begin to move while you are changing the wiper blades, you can be trapped by the wiper arm.

▶ Always switch off the windshield wipers and vehicle before changing the wiper blades.

⚠ **WARNING** Risk of injury from using the windshield wipers when the hood is open

If the windshield wipers start moving when the hood is open, you could be trapped by the wiper linkage.

▶ Always switch off the windshield wipers and vehicle before opening the hood.

Replacing the wiper blades

ⓘ If the wiper blades are worn out, they will no longer wipe the windshield properly. Replace the wiper blades twice a year, preferably in spring and fall.

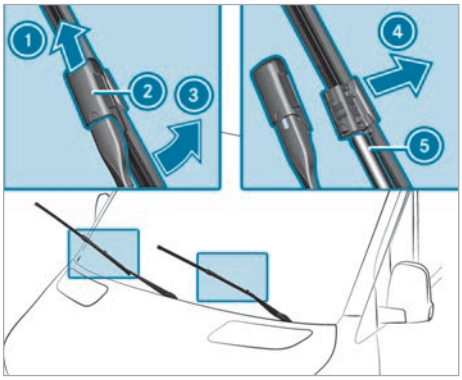

▶ Fold the wiper arm away from the windshield.

▶ Hold the wiper arm and turn the wiper blade away from the wiper arm in the direction indicated by arrow ③ as far as it will go.

▶ Slide catch ② upwards in the direction indicated by arrow ① until it engages.

▶ Remove the wiper blade from the wiper arm in the direction indicated by the arrow ④.

▶ Carefully remove hose ⑤ from the wiper blade.

▶ Attach hose ⑤ to the new wiper blade.

▶ Insert the new wiper blade into the holder on the wiper arm.

When doing so, take into account the different lengths of the wiper blades:

- Driver's side: long wiper blade
- Front passenger side: short wiper blade

▶ Slide catch ② downwards until it engages.

▶ Fold the wiper blade back onto the wiper arm.

▶ Fold the wiper arm back onto the windshield.

Replacing the rear window wiper blades

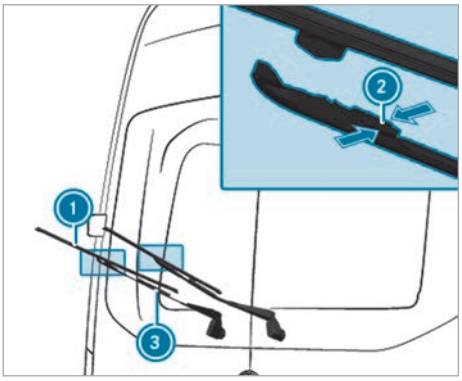

▶ Fold wiper arm ③ away from the rear window.

▶ Press both retaining clips ② together in the direction of the arrow and swivel the wiper blade away from the wiper arm.

▶ Pull wiper blade ① upwards out of the holder on wiper arm ③.

▶ Insert new wiper blade ① in the holder on wiper arm ③.

▶ Push new wiper blade ① onto wiper arm ③ until the retaining clips engage.

▶ Fold wiper arm ③ back onto the rear window.

Mirrors

Operating the outside mirrors

⚠ **WARNING** Risk of accident due to adjusting the vehicle settings while the vehicle is in motion

You could lose control of the vehicle in the following situations in particular:

- If you adjust the driver's seat, the head restraint, the steering wheel or the mirror while the vehicle is in motion
- If you fasten your seat belt while the vehicle is in motion

▶ Before starting the vehicle: in particular, adjust the driver's seat, head restraint,

steering wheel and mirror, and fasten your seat belt.

WARNING Risk of accident due to misjudgment of distance when using the front-passenger mirror

The outside mirror on the front passenger side reflects objects on a smaller scale. The objects in view are in fact closer than they appear.

- Therefore, always look over your shoulder to check the actual distance between you and the road users traveling behind you.

Adjusting the outside mirrors manually

- Adjust the outside mirrors to the correct position manually.
- **To engage an outside mirror that has been pushed out of position:** push the outside mirror into position manually.

Adjusting the outside mirrors electrically

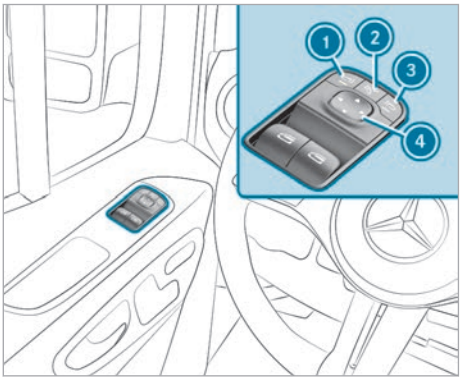

Example image

NOTE Damage to the electric outside mirrors due to folding in by hand or by force

If the electric outside mirrors are folded in or out manually, the outside mirrors may be damaged and will not engage properly.

If the outside mirrors are not folded when you have the vehicle washed at an automatic car wash, the washing brushes may forcibly fold in and damage the outside mirrors.

- Fold the outside mirrors in and out electrically only.
- Fold in the outside mirrors before having the vehicle washed at an automatic car wash.

- Before setting off, switch on the power supply or the vehicle.
- **To fold in or out:** briefly press button 2.
- **To select:** use button 1 or 3 to select the outside mirror to be adjusted.
- **To adjust:** use button 4 to set the position of the mirror surface.
- **To engage an outside mirror that has been pushed out of position:** press and hold button 2.
  You will hear a click and the mirror will audibly engage in position. The outside mirror will be set to the correct position.

Resetting the outside mirrors

ⓘ If the battery has been disconnected or completely discharged, the outside mirrors must be reset. Only then will the automatic mirror folding function work properly.

- Switch on the power supply or the vehicle.
- Briefly press button 2.

Heating the outside mirrors

- **Vehicles without a rear window heater:** at low temperatures, the mirror heater will switch on automatically once the vehicle has been started.
- **Vehicles with a rear window heater:** at low temperatures, the mirror heater will switch on automatically once the vehicle has been started. The mirror heater can also be switched on together with the rear window heater using the rear window heater button.

Using the digital inside rearview mirror

The vehicle may be equipped with a digital inside rearview mirror. This uses a rear-mounted camera on top of the roof to provide a better view to the rear. The inside rearview mirror can be used either as a standard inside rearview mirror or as a display.

To prevent glare from the digital inside rearview mirror, first set the digital inside rearview mirror as the standard inside rearview mirror.

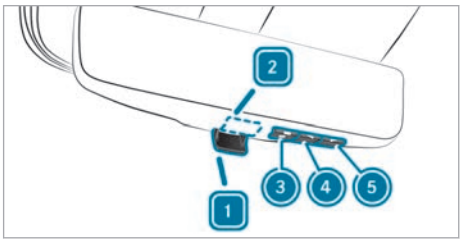

Digital image noise may occur on the display under certain circumstances in unfavorable ambient light.

Certain types of sunlight, e.g. sun low on the horizon or light from another intense light source, can reduce the display's contrast and cause it to become too bright. In such situations, objects on the display may be obscured or difficult to see. In these cases, be particularly careful and adapt your driving style accordingly.

Drivers must always wear the necessary personal visual aids required for them to drive a vehicle. Drivers with presbyopia (age-related long-sightedness) should, if necessary, wear visual aids with multifocal lenses to be sufficiently able to see traffic including via the displays.

ⓘ If the camera on top of the roof at the rear is dirty, the image may be impaired. In this case, clean the camera manually with a damp cloth. Observe the notes on cleaning the digital inside rearview mirror (→ page 232).

▶ **To use the standard inside rearview mirror:** move the switch to position 1.

▶ **To use the display:** move the switch to position 2.

Adjusting the display brightness

ⓘ The digital inside rearview mirror is equipped with light sensors on the front and back and automatically adjusts the brightness of the display to the ambient light. Do not cover the light sensors, e.g. with a sticker.

▶ Press menu button ③ once.

▶ Press button ④ to reduce the display brightness.

or

▶ Press button ⑤ to increase the display brightness.

Adjusting the angle of the camera

▶ Press menu button ③ twice.

▶ Press button ④ to move the angle downwards.

or

▶ Press button ⑤ to move the angle upwards.

Activating and deactivating the rear view camera image

The vehicle may be equipped with a rear view camera with image in the inside rearview mirror.

▶ To activate, put the vehicle in reverse gear or press button ⑤.

▶ To deactivate, take the vehicle out of reverse gear or press button ⑤ again.

Error mode of the digital inside rearview mirror

If a system error occurs, e.g. if the camera fails, a crossed-out camera will appear at the top left of the display and no camera image will be visible in the mirror.

▶ Switch to the standard inside rearview mirror if there is a system error.

If the vehicle is equipped with a rear view camera with image in the inside rearview mirror and a system error occurs, a crossed out camera with the number 2 will appear on the left side of the display.

In this case, no camera image is available for maneuvering.

Dimming the inside rearview mirror

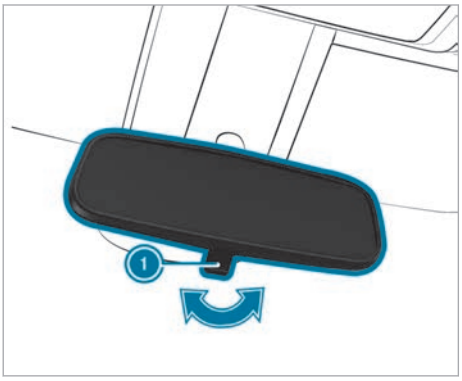

▶ Fold anti-glare lever ① in the direction of the arrow.

Overview of climate control systems

Heating system overview

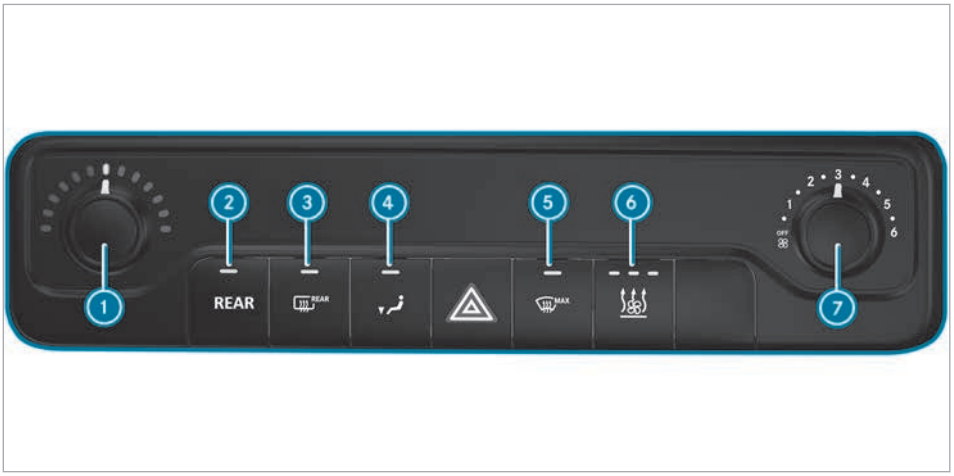

1. Setting the temperature
2. REAR Switches the rear heating on/off
3. Switches the rear window heater on/off (→ page 109)
4. Switches footwell air distribution on/off
5. MAX Switches windshield defrosting on/off (→ page 108)
6. Vehicles with stationary heater or booster heater: switches the stationary heater or booster heater on/off
7. Setting the airflow

ⓘ The indicator lamps on the buttons signify that the respective functions have been activated.

TEMPMATIC overview

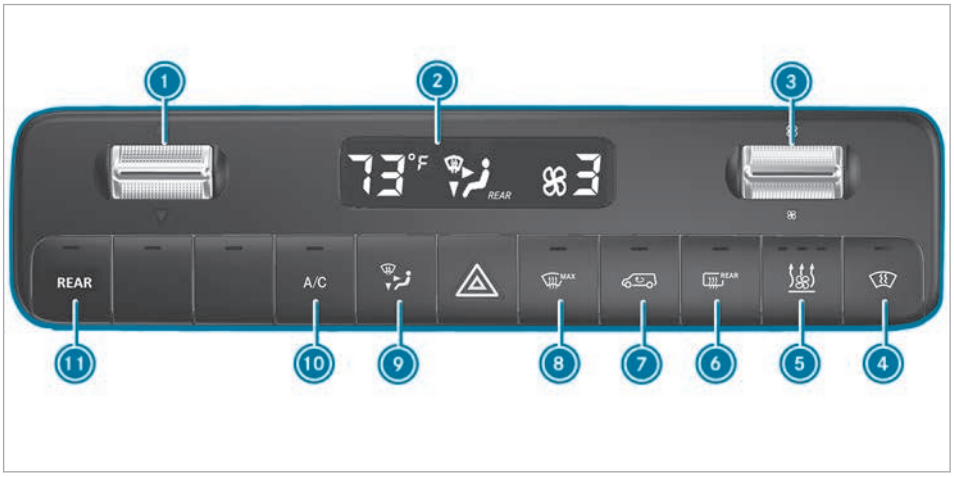

1. ▼▲ Sets the temperature
2. Display
3. Sets the airflow
4. Vehicles with windshield heater: switches the windshield heater on/off (→ page 109)
5. Vehicles with stationary heaters or booster heaters: switches the stationary heater or booster heater on/off
6. Vehicles with rear window heater: REAR switches the rear window heater on/off (→ page 109)
7. Switches air-recirculation mode on/off (→ page 108)
8. MAX Switches windshield defrosting on/off (→ page 108)
9. Sets the air distribution (→ page 108)
10. A/C Switches the A/C function on/off (→ page 107)
11. REAR Vehicles with dual-zone climate control systems: sets the rear climate control/heating (indicator lamp flashes) (→ page 106)

ⓘ The indicator lamps on the buttons signify that the respective functions have been activated.

THERMOTRONIC overview

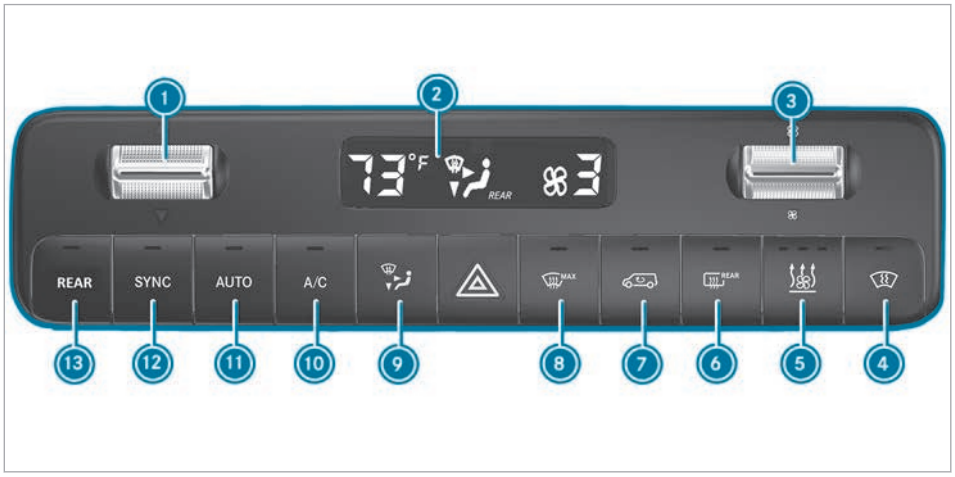

1. ▼▲ Sets the temperature
2. Display
3. Sets the airflow
4. Vehicles with windshield heater: switches the windshield heater on/off (→ page 109)
5. Vehicles with stationary heaters or booster heaters: switches the stationary heater or booster heater on/off
6. Vehicles with rear window defroster: REAR switches the rear window defroster on/off (→ page 109)
7. Switches air-recirculation mode on/off (→ page 108)
8. MAX Switches windshield defrosting on/off (→ page 108)
9. Sets the air distribution (→ page 108)
10. A/C Switches the A/C function on/off (→ page 107)
11. AUTO Sets climate control to automatic mode, front (→ page 107) and rear (→ page 107)
12. SYNC Activates/deactivates synchronization (→ page 108)
13. REAR Vehicles with dual-zone climate control systems: sets the rear passenger compartment climate control/heating (indicator lamp flashes) (→ page 106)

ⓘ The indicator lamps on the buttons signal that the functions in question have been activated.

Operating climate control systems

Switching the climate control system on/off

▶ **To switch on:** set the airflow to 1 or higher on the front-compartment menu.

▶ **To switch off:** set the airflow to 0 or OFF on the front-compartment menu.
OFF will appear on the climate control system display.

ⓘ When the climate control system is switched off, the windows may fog up more quickly. Switch the climate control system off only briefly.

ⓘ If the front-compartment system has already been switched on and the rear-compartment system has been switched off, you can switch it on by turning up the blower on the rear-compartment menu. If the front-compartment system is switched on, the rear-compartment system will automatically switch on as well.

Setting the rear-compartment climate control

Requirements:

- The climate control system has been switched on (→ page 106).

Setting the temperature and airflow with TEMPMATIC and THERMOTRONIC:

▶ Press the REAR button.
The indicator lamp on the REAR button and the REAR symbol on the climate control system display will flash.

The display will switch to the temperature and the blower on the rear passenger compartment menu.

▶ Use the [▼▲] and [⊛] rocker switches to set the required temperature and airflow on the rear-compartment menu.

ⓘ If there are significant differences between the temperature settings of the front and rear passenger compartment systems, these cannot be regulated accurately.

ⓘ If the rear-compartment climate control has been switched off, you can switch it on automatically by pressing the [SYNC] button.

Depending on the vehicle equipment, climate control will switch on the roof-mounted air-conditioning system or rear-compartment heating as required:

- **Vehicles with roof-mounted air-conditioning systems:** the rear passenger compartment can only be cooled.
- **Vehicles with rear-compartment heating:** the rear passenger compartment can only be heated.

Switching off rear-compartment climate control via TEMPMATIC and THERMOTRONIC:

▶ Press the [REAR] button.

▶ If the indicator lamp on the [REAR] button and the [REAR] symbol on the climate control system display flash, set the airflow to 0 on the rear-compartment menu.

ⓘ Indicator lamp on: rear-compartment climate control has been switched on.
Indicator lamp off: rear-compartment climate control has been switched off.
Indicator lamp flashes: the setting mode of the rear-compartment climate control is active.

Switching the A/C function on/off

Requirements:
- The climate control system has been switched on (→ page 106).

The A/C function controls the climate and dries the air inside the vehicle.

▶ Press the [A/C] button.

ⓘ Switch off the A/C function only briefly. Otherwise, the windows could fog up more quickly.

ⓘ Condensation may leak from the underside of the vehicle in cooling mode. This is not a sign of a defect.

Automatically regulating climate control

Requirements:
- The climate control system has been switched on (→ page 106).

Switching on automatic climate control
In automatic mode, the temperature, airflow and air distribution are regulated and kept constant.

▶ Press the [AUTO] button.
The display will show the temperature. The airflow and air distribution will disappear from the display.

Switching off automatic climate control

▶ Use the [⊛] rocker switch to change the airflow setting or the [⊛] button to change the air distribution (→ page 108).
The other setting will remain unaffected by the change.

Automatically controlling climate control in the rear passenger compartment

Requirements:
- Rear passenger compartment climate control has been switched on (→ page 106).

In automatic mode, the temperature, airflow and air distribution are regulated and kept constant.

▶ Press the [REAR] button.

▶ Press the [AUTO] button.

ⓘ Even if the front compartment system is in automatic mode, the rear passenger compartment system can exit automatic mode if you adjust the blower in the rear passenger compartment menu.

ⓘ If the air is cooled and the driver's, front passenger or sliding door is opened, the blower of the rear passenger compartment air conditioning system will be turned down after around 15 minutes.
When all doors have been closed again, the blower will be reset to the previous setting after around one minute.

Information on the air distribution settings

The symbols on the display indicate the vents through which the air is being directed.

TEMPMATIC

- Defroster and center air vent
- All vents
- Center vents
- Center and footwell vents

THERMOTRONIC

- Defroster vent
- Defroster and center air vent
- All vents
- Defroster and footwell vents
- Center vents
- Center and footwell vents
- Footwell vents

Setting the air distribution

Requirements

- The climate control system is switched on.

▶ Press the button repeatedly until the required air distribution appears in the display of the air conditioning system.

Switching the synchronisation function on/off

Requirements:

- The climate control system has been switched on (→ page 106).

The synchronisation function controls the climate control function centrally. The settings for the temperature and airflow in the front zone will automatically be adopted for the rear passenger compartment zone.

▶ Press the SYNC button.

ⓘ If the rear-compartment climate control has been switched off, you can switch it on automatically by pressing the SYNC button.

Defrosting the windows

Windows fogged up on the inside
Vehicles with heating system

▶ Press the MAX button.
When windshield defrosting is switched on, the temperature and airflow cannot be adjusted.

▶ Close the front air vents (→ page 109).

Vehicles with TEMPMATIC or THERMOTRONIC

▶ Press the A/C button and, if necessary, use the button to direct air onto the windshield.

▶ Increase the airflow as necessary and close the front air vents (→ page 109).

▶ If the windows remain fogged up: press the MAX button.
When windshield defrosting is switched on, the temperature and airflow cannot be adjusted.
MAX will appear on the climate control system display.

▶ **Vehicles with a windshield heater:** press the button.

Depending on operation, you can achieve faster defrosting and drying of the windshield with the following settings:

- Use the button to direct air onto the windshield.
- Set the temperature ▼▲ and the airflow to maximum using the rocker switches.
- Close the front air vents (→ page 109).
- Vehicles with windshield heater: switch on the windshield heater (→ page 109).
- Switch off the REAR rear climate control (→ page 106).
- For vehicles with heating systems: set the air distribution so that the and MAX LEDs are off (→ page 104).

Windows fogged up on the outside

▶ Switch on the windshield wiper (→ page 99).

Switching air-recirculation mode on/off

▶ Press the button.
The interior air will be recirculated.

Air-recirculation mode will switch off automatically.

ⓘ When air-recirculation mode is switched on, the windows may fog up more quickly. Switch on air-recirculation mode only briefly.

Air-recirculation mode will automatically switch on in the following cases:

- in high outside temperatures
- while the vehicle is driving through a tunnel (vehicles with THERMOTRONIC automatic climate control and navigation only)
- when the wiping with washer fluid function is switched on (→ page 99)

The indicator lamp on the button will not light up in this case. Outside air will be admitted again automatically after a maximum 30 minutes.

Switching the windshield heater on or off

ⓘ In the event of high outside temperatures, the windshield heater may not switch on.

▶ Press the button.
If the indicator lamp on the button lights up, the windshield heater has switched on.

ⓘ The windshield heater switches off automatically after a few minutes.

ⓘ If the battery voltage is too low, it may not be possible to switch the windshield heater on. If the battery voltage becomes too low while the windshield heater is in operation, the windshield heater will switch off automatically.

Switching the rear window heater on or off

▶ Press the button.
If the indicator lamp lights up, the rear window heater is switched on.

Operating air vents

Adjusting the front air vents

⚠ **WARNING** Risk of burns or frostbite due to being too close to the air vents

Very hot or very cold air can flow from the air vents.

▶ Make sure that all vehicle occupants always maintain a sufficient distance from the air vents.

▶ If necessary, direct the airflow to another area of the vehicle interior.

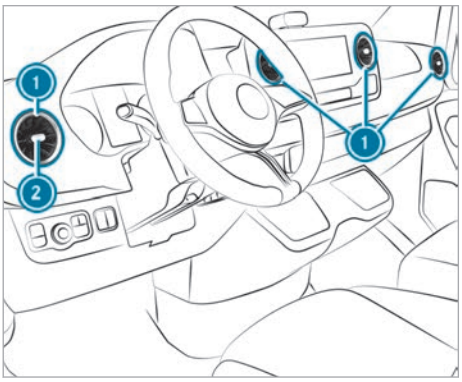

▶ **To open or close:** hold the center ② of the air vent ① and turn it to the left or right as far as it will go.

▶ **To set the airflow direction:** hold the center ② of the air vent ① and move it up, down, left or right.

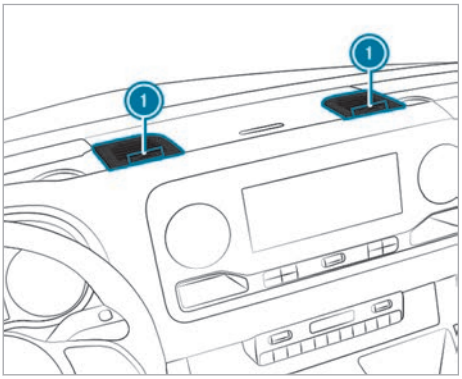

▶ **To open or close:** turn the adjustment wheel ① on the high-power air vents to the left or right as far as it will go.

ⓘ Cooled air will flow out of the high-power air vents. Heating is not possible. Only open the high-power air vents in summer during cooling mode and keep them closed in winter.

Adjusting air vents in the roof air duct

In vehicles with a rear air conditioning system, adjustable air vents have been integrated in the roof air duct.

- **To adjust the airflow:** open or close the air flaps in air vents (1) as required.
- **To adjust the air distribution:** turn air vents (1) to the required position.

Information about air vents in the rear passenger compartment

WARNING Risk of burns or frostbite due to being too close to the air vents

Very hot or very cold air can flow from the air vents.

- Make sure that all vehicle occupants always maintain a sufficient distance from the air vents.
- If necessary, direct the airflow to another area of the vehicle interior.

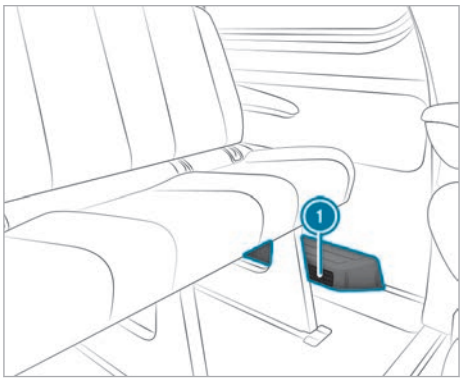

Depending on the vehicle equipment, there will be an air duct or a heater with additional air vents in the rear footwell on the left-hand side (1). Do not place any objects here. Vehicle occupants must maintain a sufficient distance due to the warm air flow and air intake.

Auxiliary heating

Notes on auxiliary heating

DANGER Risk of fatal injury due to poisonous exhaust gases

If the tailpipe is blocked or sufficient ventilation is not possible, poisonous exhaust gases such as carbon monoxide may enter the vehicle. This is the case in enclosed spaces or if the vehicle gets stuck in snow, for example.

- Always switch the stationary heater off in enclosed spaces without an air extraction system, e.g. in garages.
- Keep the tailpipe and the area around the vehicle free from snow when the engine or the stationary heater is running.
- Open a window on the side of the vehicle facing away from the wind to ensure an adequate supply of fresh air.

WARNING Risk of fire due to hot stationary heater components and exhaust gases

Flammable materials such as leaves, grass or twigs may ignite.

- When the stationary heater is switched on, make sure that:

- Hot vehicle parts do not come into contact with flammable materials.
- The exhaust gas can flow out of the stationary heater exhaust pipe unhindered.
- The exhaust gas does not come into contact with flammable materials.

NOTE Damage to the auxiliary heating

If the auxiliary heating is not used for a long time, it may be damaged.

▶ Switch on the auxiliary heating at least once a month for about ten minutes.

NOTE Damage to the auxiliary heating due to overheating

If the flow of hot air is blocked, the auxiliary heating may overheat and switch off.

▶ Do not block the flow of hot air.

ⓘ **Vehicles with a modified fuel display:** if an externally operated consumer is connected via the cable for the auxiliary heating, this will not be taken into consideration on the "remaining range" display of the on-board computer.
In this case, pay attention to the fuel display.
The fuel display reflects the actual fill level.

If you are transporting hazardous materials, comply with the relevant safety regulations. Place objects a sufficient distance from the auxiliary heating outlet opening.

Auxiliary heating heats the air inside the vehicle to the set temperature.

Operating cargo compartment ventilation

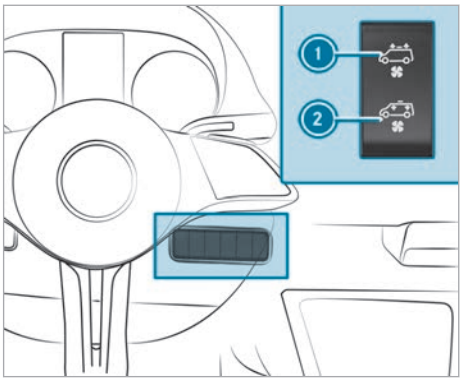

If your vehicle is equipped with a roof ventilator, you can admit fresh air to the cargo compartment or extract air from it as well.

▶ Switch on the vehicle.

▶ **To switch on and extract:** press the top section of switch ①.
The roof ventilator will remove used air from the cargo compartment.

▶ **To switch on and admit fresh air:** press the bottom section of switch ②.
The roof ventilator will feed fresh air into the cargo compartment.

▶ **To switch off:** place the switch in the center position.

Driving

Switching on the power supply or vehicle with the start/stop button

⚠ **WARNING** Risk of accident and injury due to children left unattended in the vehicle

If you leave children unattended in the vehicle, they could, in particular:

- open doors, thereby endangering other persons or road users.
- get out and be struck by oncoming traffic.
- operate vehicle equipment and become trapped, for example.

In addition, the children could also set the vehicle in motion by, for example:

- releasing the parking brake.
- changing the gearbox position.
- starting the vehicle.

▶ Never leave children unattended in the vehicle.

▶ When leaving the vehicle, always take the key with you and lock the vehicle.

▶ Keep the key out of reach of children.

⚠ **WARNING** Risk of accident and injury due to animals left unsecured or unattended in the vehicle

If you leave animals in the vehicle unattended or unsecured, they could possibly press buttons or switches.

An animal may:

- Activate vehicle equipment and become trapped, for example
- Switch systems on or off and endanger other road users

Unsecured animals may be thrown around in the vehicle in the event of an accident or sudden steering and braking maneuvers and injure vehicle occupants in the process.

▶ Never leave animals in the vehicle unattended.

▶ Always correctly secure animals while driving, e.g. using a suitable animal carrier.

Requirements:

- The key is in the detection range of the antenna (→ page 48) and the key battery is not flat.
- In addition, the following applies to vehicles with a reduced detection range: the key is located in the key holder provided in the driver's cup holder (→ page 82).
- The brake pedal is not depressed.

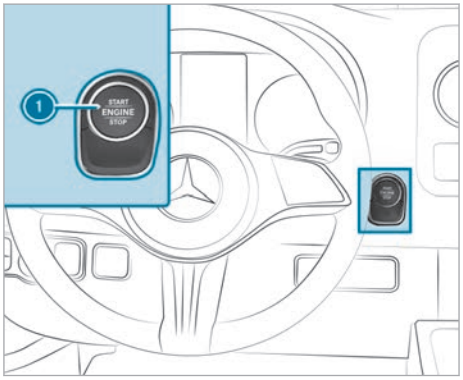

▶ **To switch on the power supply:** press button ① once.
You can, for example, activate the windshield wiper.

The power supply will be switched off again when one of the following conditions is met:

- You open the driver's door.
- You press button ① twice.

▶ **To switch on the vehicle:** press button ① twice.

The indicator and warning lamps will light up on the instrument cluster.

The vehicle will be switched off again if any of the following conditions is met:

- You do not start the vehicle within 15 minutes.
- You press button ① once.

Starting the engine

Starting the vehicle with the start/stop button

WARNING Risk of accident and injury due to children left unattended in the vehicle

If you leave children unattended in the vehicle, they could, in particular:

- open doors, thereby endangering other persons or road users.
- get out and be struck by oncoming traffic.
- operate vehicle equipment and become trapped, for example.

In addition, the children could also set the vehicle in motion by, for example:

- releasing the parking brake.
- changing the gearbox position.
- starting the vehicle.

▶ Never leave children unattended in the vehicle.

▶ When leaving the vehicle, always take the key with you and lock the vehicle.

▶ Keep the key out of reach of children.

WARNING Risk of accident and injury due to animals left unsecured or unattended in the vehicle

If you leave animals in the vehicle unattended or unsecured, they could possibly press buttons or switches.

An animal may:

- Activate vehicle equipment and become trapped, for example
- Switch systems on or off and endanger other road users

Unsecured animals may be thrown around in the vehicle in the event of an accident or sudden steering and braking maneuvers and injure vehicle occupants in the process.

▶ Never leave animals in the vehicle unattended.

▶ Always correctly secure animals while driving, e.g. using a suitable animal carrier.

Requirements:

- The key is in the detection range of the antenna (→ page 48) and the key battery is not flat.
- In addition, the following applies to vehicles with a reduced detection range: the key is located in the key holder provided in the driver's cup holder (→ page 82).
- The transmission is in position P or N.

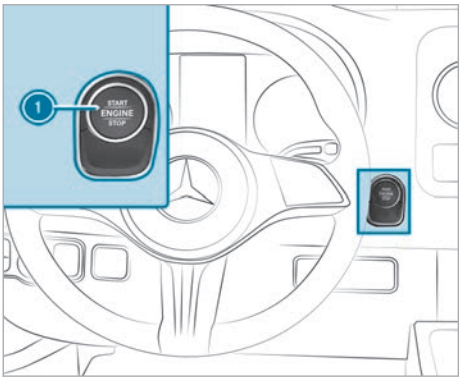

▶ Depress the brake pedal and press button 1 once.

▶ If the vehicle does not start, switch off any unnecessary consumers and press button 1 once.

▶ If the vehicle still does not start and a display message reading Place Key in the Marked Space See Operator's Manual appears on the instrument cluster, start the vehicle in emergency operation mode (→ page 114).

Starting the vehicle via Remote Online Services

Cooling or heating the vehicle interior before starting your journey

You can cool or heat the vehicle interior before starting your journey.

Ensure the following before starting the engine:

- The legal stipulations in the area where your vehicle is parked allow a vehicle to be started via smartphone.
- It is safe to start and run the engine where your vehicle is parked.
- The fuel tank is sufficiently filled.
- The starter battery is sufficiently charged.

ⓘ Further information can be found in the Mercedes-Benz App.

Starting the vehicle (Remote Online)

⚠ **WARNING** Risk of crushing or entrapment due to unintentional starting of the engine

Limbs could be crushed or trapped if the engine is started unintentionally during service or maintenance work.

▶ Always secure the engine against unintentional starting before carrying out maintenance or repair work.

Requirements:

- The park position P is engaged.
- The anti-theft alarm system is not activated.
- The hazard warning light system is switched off.
- The hood is closed.
- The side windows are closed.
- The doors are closed and locked.

▶ Start the vehicle using the smartphone.
After every vehicle start, the engine will run for ten minutes.

You can carry out a maximum of two consecutive starting attempts. You must start the vehicle with the start/stop button before trying to start the vehicle with your smartphone again.

You can switch off the vehicle at any time as follows:

- Via the Mercedes-Benz app
- By pressing the 🔓 or 🔒 button on the key

ⓘ Further information can be found in the Mercedes-Benz app.

Securing the vehicle against starting before carrying out maintenance or repair work:

▶ Switch on the hazard warning light system or unlock the doors.

or

▶ Open a side window.

Starting the vehicle in emergency operation mode

⚠ **WARNING** Risk of accident and injury due to children left unattended in the vehicle

If you leave children unattended in the vehicle, they could, in particular:

- open doors, thereby endangering other persons or road users.
- get out and be struck by oncoming traffic.
- operate vehicle equipment and become trapped, for example.

In addition, the children could also set the vehicle in motion by, for example:

- releasing the parking brake.
- changing the gearbox position.
- starting the vehicle.

▶ Never leave children unattended in the vehicle.

▶ When leaving the vehicle, always take the key with you and lock the vehicle.

▶ Keep the key out of reach of children.

If the vehicle does not start and a display message reading Place Key in the Marked Space See Operator's Manual appears on the instrument cluster, you can start the vehicle in emergency operation mode.

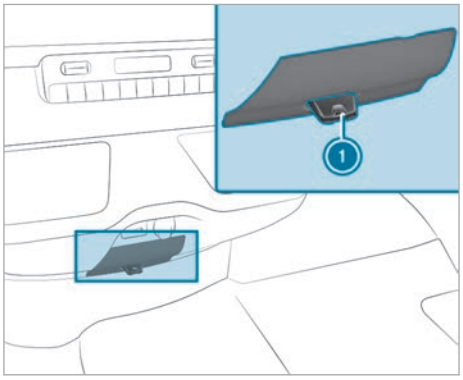

▶ Remove key ① from your key ring.

▶ Insert key ① into the slot.
The vehicle will start after a short time.

If you remove the key from the slot, it will still be possible to drive the vehicle. For any further

engine starts to be carried out, however, the key must be located in the slot throughout the journey.

▶ Have key ① checked at a qualified specialist workshop.

If the vehicle does not start:

▶ Leave key ① in the slot.

▶ Depress the brake pedal.

▶ Start the vehicle with the start/stop button.

ⓘ You can also switch on the power supply or the vehicle with the start/stop button.

Note any information on the display messages that may be shown on the instrument cluster.

Breaking-in notes

Protect the engine during the first 1000 miles (1500 km) by:

- Driving at varying road and engine speeds.
- Shifting to the next higher gear at the very latest when the needle reaches the last third before the red area in the tachometer.
- Avoiding stress on the vehicle such as driving at full throttle.
- Not shifting down to a lower gear to brake the vehicle.
- Gradually increasing the engine speed and accelerating the vehicle up to full speed after 1000 miles (1500 km).
- Do not depress the accelerator pedal past the pressure point (kickdown).
- **Vehicles with automatic transmission:** not depressing the accelerator pedal beyond the pressure point (kickdown).

This also applies if the engine or parts of the drivetrain have been replaced.

Also observe the following breaking-in notes:

- After the vehicle has been delivered or after repairs, the sensor system of some driving systems and driving safety systems adjusts itself automatically after the vehicle has been driven a certain distance. Full system effectiveness is not reached until the end of this teach-in process.
- New or replaced brake pads, brake discs and tires provide optimal braking and grip only after several hundred kilometers. Until then, compensate for the reduced braking effect by depressing the brake pedal with greater force.

Driving tips

Notes on driving

⚠ **DANGER** Danger to life from toxic exhaust gas in enclosed spaces

Combustion engines emit toxic exhaust gases suchas carbon monoxide. Inhaling these exhaust gases is hazardous to health and leads to poisoning.

▶ Never leave the engine or, if present, the stationary heater in an enclosed space without sufficient ventilation.

⚠ **WARNING** Risk of skidding and of an accident due to shifting down on slippery road surfaces

If you shift down on slippery road surfaces to increase the engine braking effect, the drive wheels may lose traction.

▶ Do not shift down on slippery road surfaces to increase the engine braking effect.

⚠ **DANGER** Risk of fatal injury from toxic exhaust gases if the tailpipe is blocked

Combustion engines emit toxic exhaust gases suchas carbon monoxide. Inhaling these exhaust gases is harmful to health and leads to poisoning. If the tailpipe is blocked or sufficient ventilation is not possible, exhaust gases can enter the vehicle. This is the case, forexample, if the vehicle gets stuck in the snow.

▶ When the engine or stationary heater is running, keep the tailpipe and the area around the vehicle free of snow.

▶ To ensure a sufficient supply of fresh air, open a window on the side of the vehicle facing away from the wind.

⚠ **WARNING** Risk of accident due to objects in the driver's footwell

Objects in the driver's footwell may impede pedal travel or block a depressed pedal.

This will jeopardize the operating and road safety of the vehicle.

▶ Stow all objects in the vehicle securely so that they cannot get into the driver's footwell.

▶ Make sure that there is always sufficient clearance for the pedals.

- Ensure there are non-slip attachments for floor mats and carpets.
- Do not lay multiple floor mats or carpets on top of one another.

WARNING Risk of accident due to incorrect footwear

Incorrect footwear includes, for example:

- Shoes with platform soles
- Shoes with high heels
- Slippers

There is a risk of an accident.

- Always wear suitable footwear so that you can operate the pedals safely.

WARNING Risk of accident if the vehicle is switched off while driving

If you switch off the vehicle while driving, safety functions are restricted or no longer available.

This may affect the power steering system and the brake force boosting, for example.

You will need to use considerably more force to steer and brake, for example.

- Do not switch off the vehicle while driving.

WARNING Risk of accident and injury due to being under the influence of alcohol and drugs while driving

Drinking and driving and/or taking drugs and driving are very dangerous combinations. Even a small amount of alcohol or drugs can affect your reflexes, perceptions and judgment.

The possibility of a serious or even fatal accident are greatly increased when you drink or take drugs and drive.

- Do not drink or take drugs and drive or allow anyone to drive who has been drinking or taking drugs.

WARNING Risk of accident and injury from operating mobile communications equipment

If you operate mobile communication equipment when driving, you will be distracted from the traffic situation. This could also cause you to lose control of the vehicle.

The probability of a serious or even fatal accident increases greatly if you operate mobile communication equipment when driving.

- Only operate mobile communication equipment when the vehicle is stationary.

For your own safety, observe the following points when operating mobile communications equipment:

- Please observe the legal requirements for the country in which you are driving.
- While driving, only operate mobile communications equipment when the traffic conditions permit it. You could otherwise be distracted from traffic, cause an accident and injure yourself and others.

WARNING Risk of accident due to overheated brake system

If you rest your foot on the brake pedal during while driving, the brake system may overheat.

This increases the braking distance and the brake system may even fail.

- Never use the brake pedal as a footrest.
- Do not press the brake pedal and accelerator pedal simultaneously while driving.

On long and steep downhill gradients, you must shift down to a lower gear in good time. This is particularly important when driving a laden vehicle. You are thus making full use of the engine's braking effect. This will take some of the strain off the brake system and prevent the brakes from overheating and wearing too quickly.

NOTE Wearing out the brake linings by continuously depressing the brake pedal

- Do not depress the brake pedal continuously whilst driving.
- To use the braking effect of the engine, shift to a lower gear in good time.

NOTE Damage to the drivetrain and engine when pulling away

- Do not warm up the engine while the vehicle is stationary. Pull away immediately.
- Avoid high engine speeds and driving at full throttle until the engine has reached its operating temperature.

NOTE Vehicle damage due to failure to observe the maximum permissible clearance height

If the vehicle height exceeds the maximum permissible clearance height, the roof and other vehicle parts may be damaged.

- Please observe the maximum clearance height indicated.
- If the vehicle exceeds the permissible clearance height, do not drive in.
- Take the modified vehicle height into account in the case of roof superstructures or other carrier systems.

ⓘ Please bear in mind that all the speeds indicated in these Operating Instructions are approximate and are subject to a certain tolerance.

Exhaust emission monitoring

Specific engine systems are designed to keep poisonous components of exhaust gases within legal limits.

These systems work optimally only if they are maintained exactly according to manufacturer's specifications. This is why all work on the engine should be performed only by qualified and authorized Mercedes-Benz Center technicians.

Under no circumstances should engine settings be changed. In addition, all specific maintenance work must be performed at regular intervals and in compliance with the service regulations of the dealer specified in the publication details. Refer to the maintenance booklet for details.

Notes on short-distance trips

If the vehicle is predominantly used for short-distance driving, fuel may accumulate in the engine oil and cause engine damage.

If you mainly drive short distances, you should drive on a freeway or country road for 20 minutes every 480 km (300 miles). This facilitates the regeneration of the diesel particulate filter.

Notes on the speed limitation

WARNING Risk of injury through exceeding the specified tire load-bearing capacity or the permissible speed rating

Exceeding the specified tire load rating or the permissible speed rating may lead to tire damage and to the tires bursting.

- Therefore, only use tire types and sizes approved for your vehicle model.
- Observe the tire load rating and speed rating required for your vehicle.

Find out about the maximum permissible speed resulting from the tires, i.e. tires and tire pressure. Please observe the legal requirements for tires for the country you are in.

ⓘ **Vehicles with tachograph:** due to the different certification requirements for the tachograph and instrument cluster, the displayed speeds may differ. Please keep to the speed display in the instrument cluster.

You can permanently limit the speed of your vehicle.

Mercedes-Benz recommends a qualified specialist workshop for programming the speed limitation.

Note that you cannot exceed a programmed speed limitation when overtaking.

On downhill gradients, the speed limitation may be exceeded. Apply the brakes if necessary.

Display messages will warn you that you are approaching the speed limitation.

ⓘ For bus-equipped vehicles, the ex-works speed limitation for your vehicle is 60 mph (100 km/h) When overtaking, bear in mind that the speed limitation cannot be exceeded.

Information about driving abroad

Service

An extensive Mercedes-Benz service is also available abroad. Nevertheless, please remember that services or spare parts may not be available immediately. The relevant workshop directories are available from an authorized Mercedes-Benz Center.

Fuel

In some countries, only fuels with an increased sulfur content will be available.

Mercedes-Benz recommends installing a fuel filter with a water separator for countries in which diesel has an increased water content.

Unsuitable fuel can cause engine damage. Information about fuel can be found in the "Fuel" section (→ page 284).

Information about transport by rail

Transporting your vehicle by rail may be subject to certain restrictions or require special measures to be taken in some countries due to varying tunnel heights and loading standards.

You can obtain information about this from any Mercedes-Benz Service Center.

Information on braking

WARNING Risk of skidding and of an accident due to shifting down on slippery road surfaces

If you shift down on slippery road surfaces to increase the engine braking effect, the drive wheels may lose traction.

- Do not shift down on slippery road surfaces to increase the engine braking effect.

WARNING Risk of accident due to the brake system overheating

If you leave your foot on the brake pedal when driving, the brake system may overheat.

This increases the braking distance and the brake system can even fail.

- Never use the brake pedal as a footrest.
- Do not depress the brake pedal and the accelerator pedal at the same time while driving.

NOTE Wearing out the brake linings by continuously depressing the brake pedal

- Do not depress the brake pedal continuously whilst driving.
- To use the braking effect of the engine, shift to a lower gear in good time.

Downhill gradients

On long and steep downhill gradients you should observe the following instructions:

- In vehicles with an automatic transmission, shift down to shift ranges **2** or **1** in good time so that the engine is running in the medium to upper engine speed range (→ page 128).

ⓘ Change the shift range in good time when cruise control is activated. Observe the driving tips (→ page 115).

In this way you make use of the braking effect of the engine to maintain your speed and do not have to brake as often. This relieves the load on the service brake and prevents the brakes from overheating and wearing too quickly.

Heavy and light loads

If the brakes have been subjected to heavy use, do not park the vehicle immediately. Keep driving for a short while. The brakes cool down more quickly in the air stream.

If you only make moderate use of the brakes, you should occasionally test their effectiveness. To do this, brake more firmly from a higher speed while paying attention to the traffic conditions. The brakes will grip better as a result.

Wet road surfaces

If you have been driving for a long time in heavy rain without braking, there may be a delayed response when you first apply the brakes. This may also occur after driving through a car wash or deep water. In such cases you will need to depress the brake pedal more firmly. Maintain a greater distance from the vehicle in front.

While paying attention to the traffic conditions, you should brake the vehicle firmly after driving on a wet road surface or through a car wash. This heats the brake discs so that they dry more quickly, thus protecting them against corrosion.

Impaired braking effect on roads treated with de-icing salt:

- A layer of salt on the brake discs or brake linings can increase braking distances considerably, or braking may only be one-sided.
- Maintain an especially large safety distance from the vehicle in front.

To remove the layer of salt:

- Apply the brakes from time to time, paying attention to traffic conditions.
- Depress the brake pedal gently at the end of a journey and when starting a new journey.

Checking the brake lining thickness

In addition to the monitoring undertaken by the brake lining wear sensor, you can regularly monitor and check all the brake linings for material wear by means of a visual inspection.

If you are unable to check the brake lining wear on the inside of the wheels, remove the wheels if you have the necessary specialist skills. Otherwise visit a qualified specialist workshop.

If the brake lining material thickness is less than 0.12 in (3 mm), have the brake linings checked and if necessary replaced at a qualified specialist workshop.

Do not rely solely on the brake lining wear sensor.

It is also strongly recommended that you have the brake linings checked at a qualified specialist workshop, and not only during every service prompted by the maintenance interval display. Also check the brake linings before long journeys, and whenever the wheels are removed.

Check the brake linings in the following situations:

- during every service according to the maintenance interval
- before long journeys
- every time a tire is replaced
- conduct regular visual inspections for your own safety

New brake discs and brake linings

New brake linings and brake discs only reach their optimal braking effect after a few hundred miles (a few hundred kilometers).

Until then, compensate for the reduced braking effect by depressing the brake pedal with greater force. For safety reasons, Mercedes-Benz recommends that you only have brake linings and brake discs installed in your vehicle which have been approved by Mercedes-Benz.

Other brake discs or brake linings may compromise the safety of your vehicle.

Always replace all brake discs and brake linings on an axle at the same time. Always install new brake linings when replacing brake discs.

Vehicles with a manual parking brake

WARNING Risk of skidding or an accident by braking with the parking brake

If you have to brake your vehicle with the parking brake, the braking distance is considerably longer and the wheels may lock. There is an increased risk of skidding and/or accident.

- Only brake the vehicle with the parking brake if the service brake has failed.
- In this case, do not apply the parking brake with too much force.
- If the wheels lock, immediately release the parking brake as much as required for the wheels to turn again.

When driving on wet roads or dirt-covered surfaces, de-icing salt or dirt may get into the parking brake. This causes corrosion and a reduction of brake force.

In order to prevent this, drive with the parking brake lightly applied from time to time.

When doing so, drive for a distance of approximately 300 ft at a maximum speed of 13 mph (20 km/h).

The brake lights do not light up when you brake the vehicle with the parking brake.

Information about driving on wet roads

Hydroplaning

WARNING Risk of hydroplaning due to low tire profile

Depending on the level of water on the road, hydroplaning may occur.

- Adapt your speed to the prevailing conditions.
- Avoid tire ruts and brake carefully.
- Change tires when the tread is too low.

Therefore, in heavy rain or other conditions in which hydroplaning can occur, drive as follows:

- Reduce your speed.
- Avoid tire ruts.
- Brake carefully.

Driving on flooded roads

Bear in mind that vehicles traveling in front or in the opposite direction create waves. This may cause the maximum permissible depth of water to be exceeded. These notes must be observed under all circumstances. Otherwise, you could damage the engine, electrics and transmission.

If you have to drive on stretches of road on which water has collected, please bear in mind the following:

- the water level of standing water must not reach above the lower edge of the front bumper.
- you must drive no faster than walking pace.

Observe the notes on fording while off-road for all-wheel drive vehicles (→ page 120).

Information about driving in winter

DANGER Risk of fatal injury from toxic exhaust gases if the tailpipe is blocked

Combustion engines emit toxic exhaust gases suchas carbon monoxide. Inhaling these exhaust gases is harmful to health and leads to poisoning. If the tailpipe is blocked or sufficient ventilation is not possible, exhaust gases can

enter the vehicle. This is the case, forexample, if the vehicle gets stuck in the snow.

- When the engine or stationary heater is running, keep the tailpipe and the area around the vehicle free of snow.
- To ensure a sufficient supply of fresh air, open a window on the side of the vehicle facing away from the wind.

WARNING Risk of skidding and of an accident due to shifting down on slippery road surfaces

If you shift down on slippery road surfaces to increase the engine braking effect, the drive wheels may lose traction.

- Do not shift down on slippery road surfaces to increase the engine braking effect.

Vehicles with automatic transmission may roll in neutral position N only for a short time. Allowing the wheels to roll for a longer period, e.g. when towing, leads to transmission damage.

If the vehicle threatens to skid, or cannot be stopped when traveling at a low speed, you can stabilize the vehicle using the following measures:

- Shift the automatic transmission to neutral position N.
- Try to maintain control of the vehicle using corrective steering.

Drive particularly carefully on slippery roads. Avoid sudden acceleration, steering and braking maneuver.

Have your vehicle winterproofed at a qualified specialist workshop in good time for the onset of winter.

Please observe the notes on snow chains (→ page 251).

Regularly check the vehicle and remove snow or ice when traveling in wintry conditions.

Accumulations of snow and ice, particularly when frozen, in the area around the air intake, moving parts, the axles and the wheel wells may cause the following problems:

- obstruction of the air intake
- damage to vehicle parts
- malfunctions owing to restriction of movement intended by design (e.g. reduced steering movement)

If there is any damage, inform a qualified specialist workshop.

Information about driving off road

WARNING Risk of accident if you do not keep to line of fall on inclines

If you drive at an angle or turn on an incline, the vehicle could slip sideways, tip and rollover.

- Always drive on inclines in the line of fall (straight up or down) and do not turn.

WARNING Risk of injury from acceleration forces during off-road driving

You could be thrown from your seat, for example.

- Always wear your seat belt even when driving off-road.

WARNING Risk of injury to the hands when driving over obstacles

If you drive over obstacles or in tire ruts, the steering wheel may whip around.

- The steering wheel must always be held securely with both hands.
- Always hold the steering wheel so that your thumbs are on the outer rim of the steering wheel.
- When driving over obstacles, expect increased steering forces at short notice.

WARNING Risk of fire caused by flammable material on hot exhaust system components

Flammable material such as leaves, grass or twigs may ignite if they come into contact with hot parts of the exhaust system.

- When driving on an unpaved road or off-road, check the vehicle underside regularly.
- In particular, remove trapped plant parts or other flammable material.
- If there is damage, consult a qualified specialist workshop immediately.

NOTE Damage to the vehicle after driving off-road

Foreign bodies, such as stones and branches, could become trapped on the vehicle underside or on wheels and tires while you are driving and cause damage to the vehicle.

Foreign bodies could cause the following damage:

- Damage the suspension, the fuel tank or the brake system
- Cause imbalances and thus vibrations

▶ Regularly remove any trapped foreign bodies, e.g. stones and branches.

▶ After driving off-road, check carefully whether there is any damage to the vehicle.

▶ If there is damage, have the vehicle checked at a qualified specialist workshop.

When driving off-road or on unpaved surfaces, check the vehicle underside, wheels and tires at regular intervals. In particular, remove any trapped foreign bodies, e.g. stones and branches.

Please observe the following notes regarding foreign bodies of this kind:

- They may damage the suspension, the fuel tank or the brake system.
- They may cause imbalances and thus vibrations.
- They may be ejected from the vehicle when you continue driving.

If there is any damage, inform a qualified specialist workshop.

When driving off-road on steep inclines, first make sure that the DEF® tank is sufficiently filled. Therefore, ensure a level of at least 2.6 gal (10 l) before off-road driving.

When driving off-road and on construction sites, sand, mud and water, also mixed with oil, forexample, can get into the brakes. This could lead to a reduction in braking effect or total brake failure, including as a result of increased wear. The braking characteristics vary depending on the material that has infiltrated the system. Clean the brakes after driving off-road. If you then notice a reduced braking effect or hear scraping noises, have the brake system checked immediately at a qualified specialist workshop. Adjust your driving style to the changed braking characteristics.

Driving off-road or on construction sites increases the possibility of vehicle damage which could in turn lead to the failure of certain major assemblies or systems. Adapt your driving style to the off-road driving conditions. Drive carefully. Have any vehicle damage repaired at a qualified specialist workshop as soon as possible.

When driving in rough terrain, do not shift the transmission to neutral position and do not disengage the clutch. You could lose control when attempting to brake the vehicle with the service brake. If your vehicle cannot manage an uphill incline, drive back down in reverse gear.

When loading your vehicle for driving off-road or on a construction site, keep the vehicle center of gravity as low as possible.

Checklist before driving off-road

- Check the fuel level (→ page 185) and top up if necessary (→ page 133).
- Check the DEF® level (→ page 137) and top up if necessary (→ page 137).
- **Engine:** check the oil level and add oil if necessary (→ page 223). Before driving up or down extreme slopes, fill the oil to the maximum level.

ⓘ If you drive up or down extreme inclines or slopes, the [symbol] symbol may appear on the instrument cluster display. The engine operating safety is not put at risk if you have filled the engine oil to the maximum level beforehand.

- **Vehicle tool kit:** check that the jack is working (→ page 268).
- Make sure that a wheel wrench (→ page 268), a wooden support for the jack, a sturdy tow rope, a folding spade and a chock (present depending on equipment) are in the vehicle.
- **Tires and wheels:** check the tire tread depth (→ page 250) and the tire pressure (→ page 257).

Rules for off-road driving

Always be aware of the vehicle's ground clearance and avoid obstacles such as, e.g. deep tire rut.

Obstacles can damage the following parts of the vehicle, e.g.:

- suspension
- drivetrain
- fuel and operating fluid reservoirs

Therefore, always drive slowly off-road. If you must drive over obstacles, have the front passenger guide you.

ⓘ Mercedes-Benz recommends that you additionally carry a shovel and a recovery rope with a shackle in the vehicle.

- Make sure that loads and items of luggage are securely stowed or lashed down (→ page 215).
- Before driving off-road, stop the vehicle and engage a low gear.
- **Vehicles with DSR:** activate DSR when you are driving downhill (→ page 154).
- If the ground requires, temporarily deactivate ESP® when starting off (→ page 148).
- Only drive off-road with the engine running and a gear engaged.
- Drive slowly and smoothly. It may often be necessary to drive at walking pace.
- Avoid spinning wheels.
- Ensure that the wheels remain in contact with the ground.
- As a precaution, get out of the vehicle to take a look at the route ahead. Exercise the utmost caution when driving across unfamiliar, unpredictable terrain.
- Look out for obstacles (e.g. rocks, holes, tree stumps and tire rut).
- Avoid edges where the ground could crumble or break away.

Notes on driving when there is water on the road

Water ingress can damage the engine, electrics and transmission.

Water can also enter the air intake of the engine and cause engine damage.

Observe the following if you must drive through water:

- The water, when calm, must only reach the lower edge of the front bumper.
- Drive at walking pace at most; water could otherwise enter the vehicle interior or engine compartment.
- Vehicles traveling in front, or oncoming vehicles, can create waves which may exceed the maximum permissible height of the water.

The braking effect of the brakes is reduced after fording. Brake carefully while paying attention to the traffic conditions until braking power has been fully restored.

After the vehicle has forded at maximum depth several times, all oils in the major assemblies (differential, manual transmission/automatic transmission and transfer case) must be replaced.

Rules for off-road fording

- Observe the safety notes and general notes on driving off-road.
- Check the depth and characteristics of the body of water before fording. The water, when calm, must only reach the lower edge of the front bumper.
- The climate control system is off (→ page 106).
- The stationary heater is off .
- Restrict the shift range to **1** or **2**.
- Avoid high engine speeds.
- Drive slowly and smoothly at no more than a walking pace.
- Ensure that no wave forms at the front of the vehicle while driving.
- After fording, dry the brakes.
- After the vehicle has forded at maximum depth several times, all oils in the major assemblies (differential, manual transmission/automatic transmission and transfer case) must be replaced.

Checklist after driving off-road

Driving off-road places greater demands on your vehicle than normal road operation. Check your vehicle after driving in rough terrain. This allows you to detect damage promptly and reduce the risk of an accident for yourself and other road users. Clean your vehicle thoroughly before driving on public roads.

If you find damage to the vehicle after off-road driving, have the vehicle checked at a qualified specialist workshop immediately.

Please note the following points after driving off-road, on construction sites and before driving on public roads:

- **Vehicles with DSR:** deactivate DSR (→ page 154).
- Activate ESP® (→ page 148).
- Clean the exterior lighting, particularly the headlamps and tail lamps, and check them for damage.
- Clean the front and rear passenger compartment license plate.
- Clean the windshield, windows and outside mirrors.
- Clean the steps, entrances and grab handles. This will make your footing safer.
- Clean the wheels and tires, wheel wells and the underbody of the vehicle with a jet of water. This increases road adhesion, especially on wet road surfaces.
- Check the wheels and tires and wheel wells for trapped foreign objects and remove them. Trapped foreign objects can damage the wheels and tires or could be ejected from the vehicle when continuing the journey.
- Check the underbody for trapped branches or other parts of plants and remove them.
- Clean the brake disks, brake pads and axial joints, particularly after operation in sand, mud, grit and gravel, water or similar conditions.
- Check the entire floor assembly, the tires, wheels, bodywork structure, brakes, steering, suspension and exhaust system for any damage.
- Check the service brake for operating safety, e.g. carry out a brake test.
- If you notice strong vibrations after driving off-road, check the wheels and drivetrain for foreign objects again. Remove any foreign objects which can lead to imbalances and thus cause vibrations. In the event of damage to the wheels and the drivetrain, visit a qualified specialist workshop immediately.

Information about driving in the mountains

The operating safety of the diesel engine is assured up to an elevation of 2500 m above sea level. You may exceed this elevation for a short time, e.g. when driving over a mountain pass. Do not drive continuously at elevations above 2500 m. Otherwise you may damage the diesel engine.

When driving in the mountains, note that engine output – and thus start-off gradeability – will decrease with increasing altitude. Notes on braking on downhill gradients can be found in the notes on braking (→ page 118).

Deactivating or activating the reverse warning device

WARNING Risk of accidents due to persons or objects in the area in which you are maneuvering

Other road users may not hear or may ignore the warning tone of the backing up warning device. There is a risk of an accident.

- Make sure that there are no persons or objects in the maneuvering area during maneuvering.
- If necessary, a second person must assist with maneuvering.

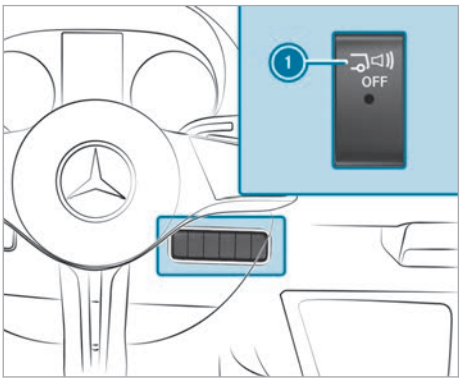

The reverse warning device is a system designed to assist you in ensuring the safety of other road users. The reverse warning device cannot guarantee that no persons or objects are situated behind the vehicle.

The reverse warning device is an acoustic warning system integrated into the tail lamp of the vehicle. When you shift to reverse gear, the reverse warning device is activated.

Observe the legal requirements for the country in which you are currently driving when using the reverse warning device.

For vehicles in the United Kingdom and Switzerland: the reverse warning device can be deactivated.

▶ **To deactivate/activate:** press the upper section of switch ①.
If the reverse warning device is deactivated, the indicator lamp in switch ① lights up.

Function of the ECO display

The ECO display summarizes your driving characteristics from the start of a journey to its completion and assists you in adopting an economical driving style to maximize range. If you interrupt your journey and switch off the vehicle for longer than four hours, the ECO display values will automatically be reset.

For vehicles with automatic transmission

You can influence consumption by implementing the following:

- Anticipating road and traffic conditions.

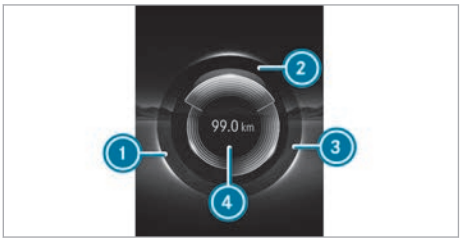

The segment's lettering will light up brightly, the outer edge will light up and the segment will be filled when the vehicle is driven with the following characteristics:

- ① ACCELERATION: moderate acceleration
- ② CONSTANT: consistent speed
- ③ COASTING: gentle deceleration and coasting

The segment's lettering is gray, the outer edge is dark and the segment empties when the vehicle is driven with the following characteristics:

- ① ACCELERATION: sporty acceleration
- ② CONSTANT: fluctuating speed
- ③ COASTING: heavy braking

You have driven in an economical manner if:

- The three segments are completely filled simultaneously.
- The edges of all three segments light up.

The additional range achieved as a result of your driving style compared to a driver with a very sporty driving style will be shown in the center of the display ④. The range displayed does not indicate a fixed reduction in consumption.

Diesel particulate filter

Notes on regeneration

⚠ **DANGER** Danger to life from toxic exhaust gas in enclosed spaces

Combustion engines emit toxic exhaust gases suchas carbon monoxide. Inhaling these exhaust gases is hazardous to health and leads to poisoning.

▶ Never leave the engine or, if present, the stationary heater in an enclosed space without sufficient ventilation.

⚠ **WARNING** Risk of fire caused by hot exhaust system parts

Flammable materials such as leaves, grass or twigs may ignite.

▶ Park the vehicle so that no flammable material can come into contact with hot vehicle components.

▶ In particular, do not park on dry grassland or harvested grain fields.

! **NOTE** Damage due to hot exhaust gases

Very hot exhaust gases are emitted from the tailpipe during regeneration.

▶ During regeneration, maintain a minimum distance of 7 ft (2 m) to other objects, e.g. parked vehicles.

▶ Carry out regeneration only on concrete or asphalt surfaces.

▶ Do not carry out regeneration in the immediate vicinity of people.

▶ Carry out regeneration in the open air and not in closed halls or rooms.

▶ Make sure that there are no flammable materials or objects in the area of the exhaust system.

Regeneration is permitted only while you are driving or at a qualified specialist workshop with an extraction system.

Regeneration without interruption takes approximately 20-25 minutes.

If the vehicle is used predominantly for short-distance driving or has extended non-operational times, this could lead to a malfunction in the automatic cleaning function of the diesel particulate filter. As a result, the diesel particulate filter may become blocked. Fuel may also accumulate in the engine oil and cause engine damage.

If you mainly drive short distances, you should drive on a freeway or go for a country drive for 20 minutes every 500 km (300 miles). This will facilitate the diesel particulate filter's burn-off process.

ⓘ Manual regeneration of the diesel particulate filter when the vehicle is stationary is classified as special equipment and is not installed as standard.

Starting and canceling regeneration

Requirements:

- All system conditions are fulfilled.
- The load condition of the diesel particulate filter is at least 100 % and at most 129 %.
- The vehicle is stationary.
- The parking brake is applied.
- The vehicle has been started.
- Transmission position P is engaged.
- If the vehicle has a transmission-mounted power take-off, the latter is deactivated.
- If the vehicle has a parameterizable special module, the engine speed request is deactivated.

ⓘ Regeneration when the vehicle is stationary is no longer possible from a load condition of 130 %.

On-board computer:

Service ▸▸ Particulate Filter

▶ **To request regeneration:** Select OK.

▶ **To observe the vehicle surroundings:** Make sure that no injuries or damage due to the hot exhaust gases can occur in the vehicle surroundings. Confirm for three seconds with OK.
Regeneration will start. The engine speed will increase and a message reading Regeneration Active will appear.

ⓘ The duration of regeneration depends on the load condition of the diesel particulate filter (approximately 20-25 minutes).
After successful regeneration, the engine speed will be reduced again.

▶ **To cancel regeneration:** Switch off the vehicle or depress the coupling (for manual transmission) or brake (for automatic transmission). Regeneration will be canceled.

Regeneration cannot be requested again until the load condition of the diesel particulate filter is at least 100 % and at most 129 %.

Displaying the load

On-board computer:

Service ▸▸ Particulate Filter

The load of the diesel particulate filter is displayed.

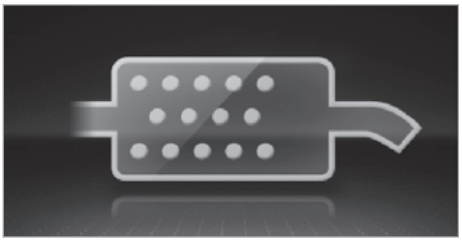

Load display at 75% load

▶ **To exit the display:** press the back button on the left-hand side of the steering wheel.

Bear in mind the following related topic:

- Operating the on-board computer (→ page 186)

Battery main switch

Notes on the battery main switch

! **NOTE** Damaged to control units and cooled component parts

When the main battery switch is removed immediately, cooling of important component parts and the storage of parameters in the control units can be interrupted. This can significantly reduce the service life of component parts and control units.

▶ Make sure that vehicle is switched off. Then wait at least 20 minutes before removing the battery main switch.

You can use the battery main switch to disconnect all your vehicle's consumers from the power supply. This will prevent uncontrolled battery discharge caused by quiescent current consumption.

If your vehicle is equipped with an auxiliary battery in the engine compartment or in the base of the co-driver's seat, you must disconnect both batteries. Only then is the electrical system fully disconnected from the power supply.

ⓘ Only disconnect the vehicle from the power supply using the battery main switch in the following situations:

- The vehicle is idle for a longer time
- it is absolutely necessary to disconnect the vehicle from the power supply

After switching on the power supply, you will need to readjust the side windows (→ page 65) and the electric sliding door (→ page 58).

Switching the power supply on/off

Switching off the power supply

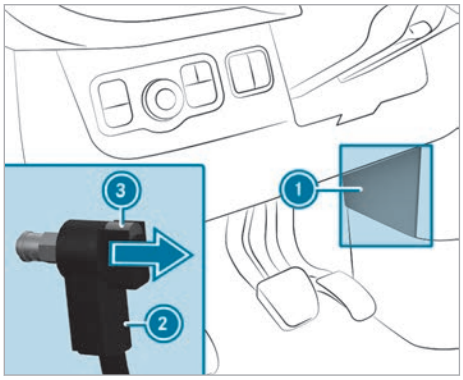

Battery main switch

ⓘ Note the remaining time before the next service due date (→ page 220) . The time recording is also disrupted if the power supply is disconnected.

▶ Switch off the vehicle and wait at least 20 minutes.

▶ Pull cover ① on the upper edge towards the driver's door and remove it upwards.

▶ Press and hold button ③.

▶ Pull plug ② out of the earth pin.

▶ Push plug ② as far as possible in the direction of the arrow so that it cannot make contact with the earth pin.
All starter battery consumers are disconnected from the power supply.

Switching on the power supply

▶ Press plug ② onto the earth pin until you feel it engage and plug ② is in full contact with the earth pin.
All starter battery consumers are reconnected to the power supply.

▶ Insert cover ① from above and press its right edge into the lining of the center console.

Automatic transmission

DIRECT SELECT lever

Function of the DIRECT SELECT lever

⚠ **WARNING** Risk of accident and injury due to children left unattended in the vehicle

If you leave children unattended in the vehicle, they could, in particular:

- open doors, thereby endangering other persons or road users.
- get out and be struck by oncoming traffic.
- operate vehicle equipment and become trapped, for example.

In addition, the children could also set the vehicle in motion by, for example:

- releasing the parking brake.
- changing the gearbox position.
- starting the vehicle.

▶ Never leave children unattended in the vehicle.

▶ When leaving the vehicle, always take the key with you and lock the vehicle.

▶ Keep the key out of reach of children.

⚠ **WARNING** Risk of accident due to incorrect gearshifting

If the engine speed is higher than the idle speed and you engage the transmission position D or R, the vehicle may accelerate sharply.

▶ If you engage the transmission position D or R when the vehicle is at a stand-

still, always depress the brake pedal firmly and do not accelerate at the same time.

WARNING Risk of accident and injury when the transmission position is not engaged

The current transmission position will be highlighted on the instrument cluster display.

If the selected transmission position is not highlighted, the vehicle may pull away in the wrong direction or roll away.

- After changing the transmission position, always check the transmission position display on the instrument cluster.

If the transmission position is not highlighted on the instrument cluster display even after a short time:

- Pay attention to the display messages.
- Pull away carefully and check the engaged transmission position.
- When parking, engage the parking brake and secure the vehicle against rolling away.
- Have the transmission checked immediately at a qualified specialist workshop.

NOTE Transmission damage due to shifting at high engine speed or when the vehicle is rolling

You can damage the automatic transmission if you shift from D to R, from R to D or directly to P when the engine speed is too high or the vehicle is rolling.

- Only change the transmission position when the vehicle is stationary.

The shifting characteristics of the automatic transmission are designed for comfortable and economical handling. For this reason, the display on the instrument cluster will show the C for Comfort in addition to the transmission position indicator.

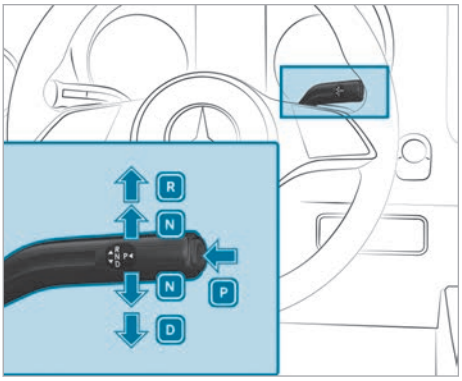

P Park position
R Reverse gear
N Neutral
D Drive position

Selecting reverse gear R

- Depress the brake pedal and push the DIRECT SELECT lever upwards past the first point of resistance.

Selecting neutral N

WARNING Risk of accident and injury when neutral position is engaged

If you park the vehicle with the transmission in neutral position N and the parking brake is not engaged, the vehicle may roll away.

There is a risk of accident and injury.

- Before parking the vehicle, apply the parking brake.

- Press the brake pedal and the DIRECT SELECT lever upwards or downwards to the first point of resistance.

Subsequently releasing the brake pedal will allow you to move the vehicle freely, e.g. to push it or tow it away.

If you want the automatic transmission to remain in neutral N when the vehicle is switched off, carry out the following:

- Start the vehicle.
- Depress the brake pedal and engage neutral N.
- Release the brake pedal.
- Switch off the vehicle.

ⓘ If you then leave the vehicle and the key is still in the vehicle, the automatic transmission will stay in neutral [N] from then on.

Selecting park position P

! NOTE Damage due to engaging park position [P] while the vehicle is rolling

If you shift the transmission into park position [P] while the vehicle is rolling, the transmission may be damaged.

- ▶ If the vehicle is rolling, do not open a door.
- ▶ Only engage park position [P] when the vehicle is stationary.

- ▶ Observe the notes on parking the vehicle (→ page 140).
- ▶ Depress the brake pedal until the vehicle is stationary.
- ▶ When the vehicle is stationary, press button [P].
  When the [P] transmission position indicator is shown, park position is engaged. If the [P] transmission position indicator is not shown, apply the parking brake. Secure the vehicle against rolling away with a wheel chock or a non-sharp-edged object.

ⓘ Depending on the situation, it may take a short time until transmission position [P] is engaged. Therefore, always pay attention to the transmission position indicator.

Park position [P] will be engaged automatically when one of the following conditions is met:

- You switch the stationary vehicle off in transmission position [D] or [R].
- You open the fully closed driver's door when the vehicle is stationary in transmission position [D] or [R].
- When the vehicle is moving, you switch if off in transmission position [D] or [R] and bring it to a standstill.
- When the HOLD function is active or the Active Distance Assist DISTRONIC system is active (vehicle stationary), the driver leaves the seat or the driver's seat belt buckle is unfastened.
- When the vehicle is rolling, you shift to transmission position [N], bring the vehicle to a standstill and open the fully closed driver's door when the vehicle is stationary.
- Engaging park position [P] automatically is required by the vehicle.

ⓘ To maneuver with an open driver's door, open the driver's door while the vehicle is stationary and engage transmission position [D] or [R] again.

Selecting drive position D

- ▶ Depress the brake pedal and push the DIRECT SELECT lever downwards past the first point of resistance.

When the automatic transmission is in transmission position [D], it will shift gears automatically. This depends on the following factors:

- Accelerator pedal position
- Vehicle speed

Restricting the shift range

Requirements:

- Transmission position [D] is engaged (→ page 128).

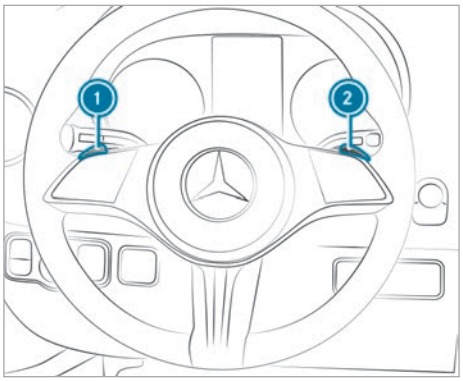

- ▶ **To restrict the shift range:** briefly pull steering wheel paddle shifter (1).
  The automatic transmission will shift to the next gear down, depending on the gear currently engaged. The shift range will also be restricted.

  The selected shift range will be shown on the instrument cluster display. The automatic transmission will shift only as far as the selected gear.

▶ Pull and hold steering wheel paddle shifter ①. The automatic transmission will change to a shift range that allows easy acceleration and deceleration. To do this, the automatic transmission will shift down one or more gears and restrict the shift range.

The selected shift range will be shown on the instrument cluster display. The automatic transmission will shift only as far as the selected gear.

ⓘ The automatic transmission will not shift down if you pull steering wheel paddle shifter ① whilst traveling at too high a speed.
The automatic transmission will not shift up if the shift range is restricted and the maximum engine speed of the restricted shift range has been reached.

▶ **To de-restrict the shift range:** briefly pull steering wheel paddle shifter ②.
The automatic transmission will shift to the next gear up, depending on the gear currently engaged. This will de-restrict the shift range at the same time.

▶ **To de-restrict the shift range:** pull and hold steering wheel paddle shifter ②.

or

▶ Engage transmission position D again (→ page 128).
The automatic transmission will shift up one or more gears depending on the gear currently engaged. Simultaneously, the shift range restriction will be deactivated and the transmission position will appear on the instrument cluster display D.

Recommended shift ranges for the following driving conditions:

3 Use the engine's braking effect.

2 Use the engine's braking effect on downhill gradients and when driving on steep roads and in mountainous areas as well as in arduous conditions.

1 Use the engine's braking effect on extremely steep downhill gradients and on long downhill stretches.

Using kickdown

▶ **For maximum acceleration:** depress the accelerator pedal beyond the point of resistance.

▶ Ease off the accelerator pedal once the desired speed is reached.

All-wheel drive

Notes on all-wheel drive

All-wheel drive ensures permanent drive for all four wheels and, together with ESP®, improves the traction of your vehicle. There is smart closed-loop control of the drive torque between the front and rear axles.

Traction control for all-wheel drive also takes place via the brake system. This may cause the brake system to overheat. Decelerate or stop to let the brake system cool down.

If a wheel spins due to insufficient traction, observe the following notes:

- When pulling away, make use of the assistance from the traction control integrated in ESP®. Depress the accelerator pedal as far as necessary.
- Take your foot off the accelerator pedal, slowly, while the vehicle is in motion.

In wintry road conditions, use winter tires (M+S tires) and, if necessary, snow chains (→ page 251). Only in this way can the maximum effect of all-wheel drive be achieved.

Use DSR (Downhill Speed Regulation) when driving downhill off road (→ page 153).

If you fail to adapt your driving style or if you are inattentive, the all-wheel drive system can neither reduce the risk of an accident nor override the laws of physics. The all-wheel drive system cannot take road, weather and traffic conditions into account. The all-wheel drive system is only an aid. You are responsible for maintaining a safe distance from the vehicle in front, for vehicle speed, for braking in good time and for staying in lane.

! **NOTE** Damage caused by use of a single-axle dynamometer

Operating an all-wheel-drive vehicle on a single-axle dynamometer may cause damage to the drivetrain and brake system.

▶ Carry out a function or performance test only on a two-axle dynamometer.

▶ Consult a qualified specialist workshop before you operate the vehicle on a dynamometer.

NOTE Damage to transfer case caused by incorrect towing

If you tow the vehicle with one axle raised, the transfer case may be damaged. Damage of this type is not covered by the Mercedes-Benz Limited Warranty.

- Never tow the vehicle with one axle raised.
- Tow the vehicle only with all wheels on the ground or with the entire vehicle raised.
- Follow the instructions for towing the vehicle with all wheels in contact with the ground.

Electronic level control

Function of ENR (electronic level control)

WARNING Risk of becoming trapped due to the vehicle lowering

When lowering the vehicle, other people could become trapped if their limbs are between the vehicle body and the wheels or underneath the vehicle.

- Make sure nobody is underneath the vehicle or in the immediate vicinity of the wheel arches when you lower the vehicle.

WARNING Risk of injury due to the jack tipping over

If you park a vehicle with air suspension, the air suspension can remain active for up to an hour, even if the vehicle is switched off. If you then raise the vehicle using the jack, the air suspension will attempt to even out the vehicle level.

The jack can tip over.

- Before raising the vehicle, press the Service button on the remote control for the air suspension.
  This prevents the vehicle level from being automatically readjusted or manually raised or lowered.

WARNING Risk of accident due to lowered or raised chassis frame

If the chassis frame is adjusted, the braking and driving characteristics can be severely impaired. You could also exceed the permissible vehicle height.

- Adjust the driving level before driving off.

WARNING Risk of accident due to a malfunction of electronic level control

The vehicle level may be too high, too low or asymmetrical.

The driving and steering characteristics of the vehicle may be noticeably different.

- Adapt your driving style to the changed driving characteristics.
- Stop, paying attention to road and traffic conditions.
- Consult a qualified specialist workshop.

NOTE Risk of damage to the chassis from lowered vehicle level

If electronic level control is malfunctioning or readjusts while you are driving, the vehicle level may be lowered.

- Pay attention to the road conditions and ensure there is sufficient ground clearance.
- Drive carefully.

The vehicle level depends on the load condition and load distribution. Electronic level control adjusts the level of the rear axle automatically on vehicles with an air-sprung rear axle. The vehicle level is thereby always maintained at the driving level, regardless of vehicle load. Driving dynamics remain unaffected. The height difference between the sides of the vehicle may be up to 0.4 in (1 cm).

Electronic level control is not engine-dependent and is only operational when the vehicle is switched on. The electronic level control compressor works audibly.

ⓘ If the compressor works constantly or starts up several times per minute, electronic level control is malfunctioning.

Depending on the vehicle's equipment, electronic level control switches between manual mode and automatic mode. This depends on the speed or the position of the parking brake.

Depending on the speed signal: manual mode is activated when the vehicle is stationary. You may raise or lower the vehicle level. If you drive faster than 6 mph (10 km/h), manual mode is deactivated and the vehicle level is set.

Depending on the parking brake: manual mode is activated when the parking brake is engaged. You may raise or lower the vehicle level to load and unload. When you release the parking brake, manual mode is deactivated and the vehicle level is set.

When working on the vehicle or changing a wheel, you can deactivate electronic level control (→ page 131).

If electronic level control is malfunctioning or the vehicle level is too high or too low, a warning tone sounds.

The driving and steering characteristics of the vehicle will be noticeably different. Electronic level control adjusts the vehicle level to the normal level as soon as possible. Drive on carefully until the warning tone stops. Only then is the vehicle at normal level.

To restore the vehicle level, automatic mode and electronic level control automatically switch on again depending on the option selected:

- when the parking brake is released
- from speeds of approximately 6 mph (10 km/h)

If the electronic level control compressor is in danger of overheating, for example owing to repeated raising or lowering within a short period, electronic level control is deactivated. You can raise or lower the vehicle level again after a few minutes.

Raising and lowering the vehicle level

Requirements:

- The vehicle is switched on.
- **Depending on the parking brake:** the vehicle is parked and the parking brake is engaged.
- **Depending on the speed signal:** the vehicle was parked and a vehicle speed of 6.2 mph (10 km/h) is subsequently not exceeded.

Using the remote control

ⓘ Certain special equipment enables other operation options:

- Ambulance: raising the vehicle level above the driving level (center position) is not possible. Only the lowest position and the driving level can be set.
- Speed signal: in order to operate electronic level control, the parking brake must not be applied. Electronic level control can be operated manually up to 6.2 mph (10 km/h). If this speed is exceeded, driving level will be set automatically.
- 30 minute run-on module: electronic level control can be operated up to 30 minutes after switching off the vehicle.

The remote control is located in a holder on the B-pillar on the driver's side. Remove the remote control from the holder before use.

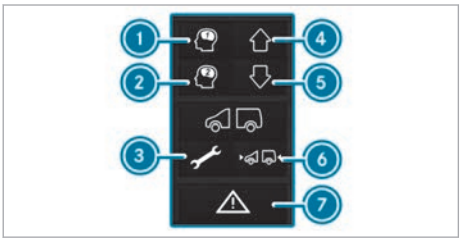

Electronic level control performs a self-check regularly when it is activated and while in use. Indicator lamp ⑦ on the remote control lights up for about one second when you switch on the vehicle.

There is a malfunction if indicator lamp ⑦ behaves in the following ways:

- the indicator lamp does not light up when you switch on the vehicle

  or

- the indicator lamp then lights up again or flashes

In addition, a warning tone is emitted from the remote control for approximately 30 seconds. The malfunction that has been detected can be shown using the indicator lamps (signaling of malfunction codes).

▶ **To raise or lower the vehicle level:** press and hold button ④ or ⑤ until the vehicle level reaches the required height.
The indicator lamp on button ④ or ⑤ flashes as long as the vehicle level is being changed. When the vehicle level has been set, the indicator lamp on button ④ or ⑤ lights up.

▶ **To lower automatically:** briefly press button ⑤.

Electronic level control automatically lowers the vehicle to the next lower position:

- From the highest position to driving level
- From driving level to the lowest position

The indicator lamp on button ⑤ flashes as long as the vehicle level is being changed.

When the vehicle level has been set, the indicator lamp on button 5 lights up.

ⓘ By pressing button 4 during the movement, the original position will be reset.

▶ **To raise automatically:** briefly press button 4.

Electronic level control automatically raises the vehicle to the next higher position:

- From the lowest position to driving level
- From driving level to the highest position

The indicator lamp on button 4 flashes as long as the vehicle level is being changed. When the vehicle level has been set, the indicator lamp on button 4 lights up.

ⓘ By pressing button 5 during the movement, the original position will be reset.

▶ **To raise or lower automatically to driving level (center position):** press and hold button 6. Electronic level control automatically raises or lowers the vehicle to driving level.

▶ **To save the set vehicle level:** set the required vehicle level.

▶ Press and hold button 1 or 2 until you hear a warning tone.
The vehicle level set has been saved on corresponding button 1 or 2.

▶ **To call up the saved vehicle level:** briefly press button 1 or 2.
Electronic level control automatically raises or lowers the vehicle to the saved driving level.

The indicator lamp on button 1 or 2 flashes as long as the vehicle level is being changed. When the vehicle level has been set, the indicator lamp on button 1 or 2 lights up.

Service mode

ⓘ Service mode may only be activated or deactivated at a qualified specialist workshop by trained personnel. In service mode, the air suspension system is deactivated for maintenance or error detection.

▶ **To switch on:** press the 3 button.
Service mode is active and the indicator lamp in button 3 lights up continuously.

▶ **To deactivate:** press button 3.
Service mode is deactivated and the indicator lamp in button 3 switches off.

Using the button in the switch panel or in the rear passenger compartment

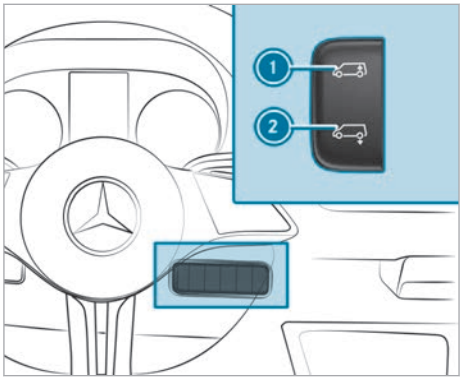

Button in the switch panel

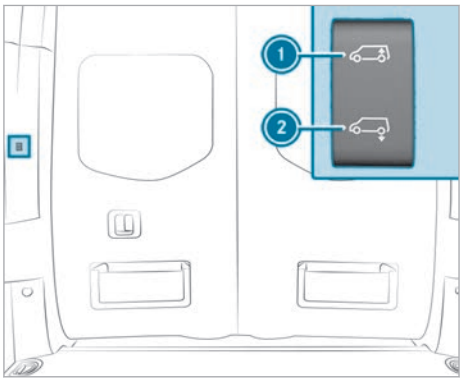

Button in the rear passenger compartment

▶ **To raise or lower the vehicle level:** press and hold button 1 or 2 until the vehicle level reaches the required height.

▶ **To lower automatically:** briefly press the lower section of switch 2.

Electronic level control automatically lowers the vehicle to the next lower position:

- From the highest position to driving level
- From driving level to the lowest position

ⓘ By pressing button 1 during the movement, the original position will be reset.

- **To raise automatically:** briefly press the lower section of switch ①.

  Electronic level control automatically raises the vehicle to the next higher position:
  - From the lowest position to driving level
  - From driving level to the highest position

ⓘ By pressing button ② during the movement, the original position will be reset.

Using electronic level control for charging with air in an emergency

NOTE Damage due to excess pressure

If the pressure in the air suspension bellows is too high, the compressed-air lines or the air suspension bellows can be damaged.

- In doing so, do not exceed the maximum permissible operating pressure of 0.113 ksi (900 kPa (9 bar/130 psi)).

Only for vehicles with valves for electronic level control emergency charging: if electronic level control is malfunctioning and the vehicle is leaning, you can raise or lower the vehicle by connecting an external compressed-air source to one of the emergency valves (similarly to tire valves). If electronic level control is not operational, you can drive on carefully to the nearest qualified specialist workshop and have the malfunction remedied.

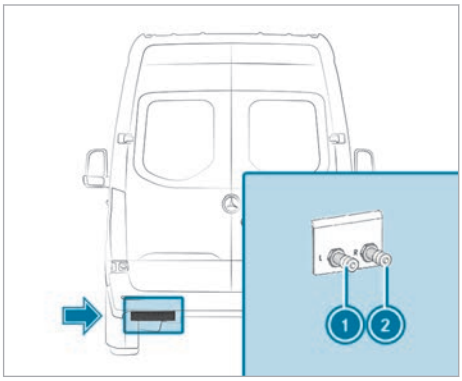

- Apply the parking brake.
- **Vehicles with automatic transmission:** shift the transmission to position P.
- Switch off the vehicle.
- Turn the valve cap of the corresponding valve (① L = left, ② R = right).
- Stand to the side of the vehicle when connecting the external compressed-air source.
- Raise or lower the vehicle level by charging or releasing compressed air until the driving level has been reached and the vehicle is in a horizontal position. While doing so, ensure you observe the maximum permissible operating pressure of 900 kPa (9 bar/130 psi).
- Disconnect the external compressed-air source.
- Tighten the valve cap on the valve (① L = left, ② R = right).
- Drive on carefully to the nearest qualified specialist workshop.

Rectifying problems with the electronic level control

You cannot raise or lower the vehicle level when stationary

Possible cause:

- The compressor is in danger of overheating. After repeatedly raising and lowering the vehicle, the electronic level control repeat lock is deactivated.

- Try to set the vehicle level manually again after approximately one minute.

or

Possible cause:

- Electric level control has been deactivated due to undervoltage. The battery may not be charging.

Handling and ride comfort may suffer.

- Start the vehicle.
- Consult a qualified specialist workshop as soon as possible.

Refueling

Refueling the vehicle

WARNING Risk of fire or explosion from fuel

Fuels are highly flammable.

- Fire, open flames, smoking and creating sparks must be avoided.
- Before refueling, switch off the vehicle and, if installed, the stationary heater,

and leave them switched off during refueling.

WARNING Risk of injury from fuels

Fuels are poisonous and hazardous to your health.

- Do not swallow fuel or let it come into contact with skin, eyes or clothing.
- Do not inhale fuel vapor.
- Keep children away from fuel.
- Keep doors and windows closed during the refueling process.

If you or other people come into contact with fuel, observe the following:

- Immediately rinse fuel off your skin with soap and water.
- If fuel comes into contact with your eyes, immediately rinse them thoroughly with clean water. Seek medical attention immediately.
- If you swallow fuel, seek medical attention immediately. Do not induce vomiting.
- Change immediately out of clothing that has come into contact with fuel.

WARNING Risk of fire and explosion due to electrostatic charge

Electrostatic charge can ignite fuel vapor.

- Before you open the fuel filler cap or take hold of the pump nozzle, touch the metallic vehicle body.
- To avoid creating another electrostatic charge, do not get into the vehicle again during the refueling process.

WARNING Risk of fire from fuel mixture

Vehicles with a diesel engine:

If you mix diesel fuel with gasoline, the flash point of the fuel mixture is lower than that of pure diesel fuel.

While the vehicle is running, component parts in the exhaust system may overheat without warning.

- Never refuel using gasoline.
- Never mix gasoline with diesel fuel.

NOTE Do not use gasoline to refuel vehicles with a diesel engine

If you have accidentally refueled with the wrong fuel:

- Do not switch on the vehicle. Otherwise fuel may enter the engine.

  Even small amounts of the wrong fuel could result in damage to the fuel system and the engine. The repair costs are high.

- Consult a qualified specialist workshop.
- Have the fuel tank and fuel lines drained completely.

NOTE Damage to the fuel system caused by overfilled fuel tanks

- Only fill the fuel tank until the pump nozzle switches off.

NOTE Damage to the fuel system if the fuel level is too low or there is no fuel

- Do not let the fuel level to fall below 1.3 gal (5 l) while the vehicle is in use.
- If the tank is completely empty, refuel according to the instructions in this section.

NOTE Damage to painted surfaces due to fuel

- Do not spill any fuel on painted surfaces.

ENVIRONMENTAL NOTE Environmental damage due to improper handling of fuel

If fuels are handled improperly, they pose a danger to persons and the environment.

- Do not allow fuels to run into the sewage system, the surface waters, the ground water or into the ground.

Requirements:

- The vehicle is unlocked.
- The auxiliary heating is switched off.
- The vehicle is switched off.
- The left front door is open.

Do not get back into the vehicle during the refueling process. You might build up an electrostatic charge again.

Observe the notes on operating fluids (→ page 282).

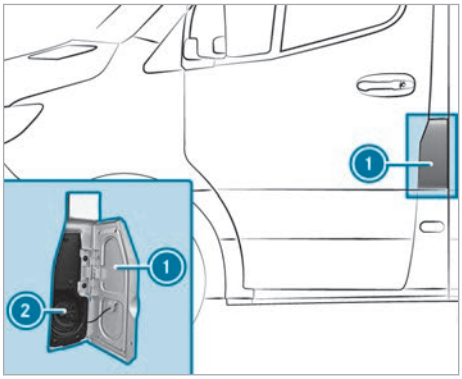

1 Fuel filler flap
2 Fuel filler cap

ⓘ The fuel filler flap is beside the left front door when viewed in the direction of travel. The position of the fuel filler cap is also shown in the instrument cluster [⛽]. The arrow on the filling pump specifies the side of the vehicle.

▶ Open fuel filler flap 1.

▶ Turn fuel filler cap 2 counter-clockwise and remove it.

▶ Close all vehicle doors to prevent fuel vapors from entering the vehicle interior.

▶ Slide the filler neck of the pump nozzle fully into the tank, hook in place and refuel.

▶ Fill the fuel tank only until the pump nozzle switches off.

▶ Replace fuel filler cap 2 and turn it clockwise. You will hear a click when the fuel filler cap is closed fully.

▶ Open the left front door.

▶ Close fuel filler flap 1.

ⓘ **Vehicles with an incorrect fueling protector to prevent incorrect fueling with gasoline:** The filler neck is designed for refueling at diesel filling pumps for cars.

ⓘ **Vehicles without an incorrect fuelling protector:** refuel at a diesel filling pump for cars if possible. However, you can also refuel at a diesel filling pump for trucks.

ⓘ If the fuel tank has been run completely dry, add at least 1.3 gal (5 l) of fuel.

Rectifying problems with the fuel and fuel tank

Fuel is leaking from the vehicle

Possible cause:

- The fuel line or the fuel tank is defective.

▶ Apply the parking brake.

▶ Switch off the vehicle.

▶ Open the driver's door.
The tow position is set to [0].

▶ Do not restart the vehicle under any circumstances!

▶ Contact a qualified specialist workshop.

▶ Take measures to contain leaked fuel.

The vehicle does not start

Possible cause:

- The fuel tank is completely empty.

▶ Refuel the vehicle with at least 1.3 gal (5 l) of fuel.

ⓘ If you have parked the vehicle on a downhill gradient, more fuel than prescribed may be necessary.

▶ Switch on the vehicle for approximately ten seconds.

▶ Crank the starter continuously for a maximum of ten seconds until the vehicle runs smoothly.

! **NOTE** Damage to the fuel system if incorrectly drained

▶ Switch the vehicle on and start it after around ten seconds at the earliest.

If the vehicle does not start:

▶ Switch on the vehicle again for approximately ten seconds.

▶ Crank the starter again continuously for a maximum of ten seconds until the vehicle runs smoothly.

If the vehicle does not start after three attempts:

▶ Contact a qualified specialist workshop.

DEF®

Notes on AdBlue®

NOTE Irritation of skin, eyes and respiratory tract by DEF

DEF may be irritating if inhaled, swallowed or if it comes in contact with eyes or skin. When the tank is opened, ammonia vapors may escape.

- ▶ Do not inhale or swallow DEF.
- ▶ Avoid contact of DEF with skin, eyes or clothing.
- ▶ Keep DEF away from children.
- ▶ Only fill the DEF tank in well-ventilated areas.

If a person has come into contact with DEF, observe the following points:

- If DEF is swallowed, drink plenty of water and seek medical attention immediately.
- If DEF has gotten into the eyes, rinse the eyes with water for 15 minutes, also under the eyelids.
- Immediately rinse off DEF from the skin with water.

NOTE Damage and malfunctions caused by impurities in DEF

Impurities in DEF result in the following:

- Higher emission values
- Damage to the catalytic converter
- Engine damage
- Malfunctions in the DEF exhaust gas aftertreatment system

▶ Avoid impurities in DEF.

NOTE Soiling due to crystallized DEF residue

DEF residue crystallizes after some time.

- ▶ When refilling DEF, immediately rinse any surfaces that it comes into contact with and remove all DEF residue.
- ▶ DEF can also be removed with a damp cloth and cold water.
- ▶ If DEF has already crystallized, clean using a sponge and cold water.

ENVIRONMENTAL NOTE Soiling with DEF

DEF residue crystallizes after some time and stain the affected surfaces.

- ▶ Immediately rinse surfaces that come in contact with DEF when filling with water or remove DEF with a damp cloth and cold water.

If DEF has already crystallized, clean using a sponge and cold water.

AdBlue® is a liquid urea solution used for exhaust gas aftertreatment of diesel engines. In order for the exhaust gas aftertreatment to function properly, use only AdBlue® in accordance with ISO 22241.

AdBlue® has the following properties:

- non-toxic
- colourless and odourless
- non-flammable

AdBlue® availability:

- You can use the express service to have AdBlue® added at a qualified specialist workshop, e.g.a Mercedes-Benz Service Center.
- AdBlue® is available at numerous gas stations from AdBlue® filling pumps.
- Alternatively, AdBlue® is available at qualified specialist workshops, e.g. a Mercedes-Benz Service Center, and at numerous gas stations as an AdBlue® refill canister or AdBlue® refill bottle.

ⓘ AdBlue® freezes at a temperature of approximately 12.2 °F (-11 °C). The vehicle is equipped ex-factory with an AdBlue® preheating system. This means that winter operation is also ensured at temperatures below 12.2 °F (-11 °C). If you add AdBlue® at temperatures below 12.2 °F (-11 °C), the AdBlue® level in the instrument cluster may not be displayed correctly. If the AdBlue® is frozen, drive for at least 20 minutes and then park the vehicle for a minimum of 30 seconds, so that the level is displayed correctly. In extreme winter conditions, the time needed to detect the amount added may be considerably longer. Park the vehicle in a warm garage to speed up this process.

ⓘ When using refill containers, ensure a non-drip connection to the vehicle filler neck.

Calling up the DEF® fill level display

On-board computer:

→ Service

▶ Select Additive (DEF) and confirm.
The DEF® fill level appears.

Topping up DEF®

! **NOTE** Engine damage due to DEF being in the fuel

- ▶ DEF must not be used to fill the fuel tank.
- ▶ Only use DEF to fill the DEF tank.
- ▶ Do not overfill the DEF tank.

! **NOTE** Contamination of the vehicle interior due to DEF leakage

- ▶ After adding, carefully close the DEF refill container.
- ▶ Avoid carrying DEF refill containers permanently in the vehicle.

Requirements

- The vehicle is switched off.

The following messages that appear in succession on the instrument cluster display indicate that you need to top up the DEF® tank:

- Refill Additive See Operator's Manual

  The DEF® level has fallen below the first warning threshold.
- Refill Additive Starts until Limp Mode: XXX See Operator's Manual

  The DEF® level has fallen into the reserve range.

  After the first message, the remaining amount of DEF® is sufficient for about 1200 mi (1900 km) and you will be able to start the engine a further 16 times. The number of remaining possible restarts "XX" (16 to 1) is shown in the message for every restart.
- Refill Additive Limp Mode: Max. XXX mph See Operator's Manual

  You can only drive the vehicle at a maximum speed of 5 mph (8 km/h).

Top-up quantity:

With a prompt on the display	min. 2.1 gal (8 l)
Without a prompt on the display	min. 0.5 gal (2 l)

You can also have the DEF® level displayed (→ page 137).

Opening the DEF® filler cap on fuel filler caps that are not lockable

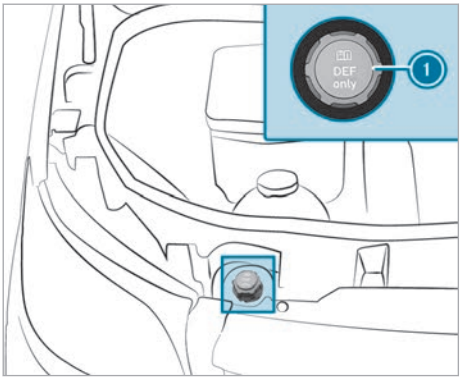

▶ Open the hood.

▶ Turn DEF® filler cap (1) counter-clockwise and remove it.

Opening the DEF® filler cap when the fuel filler cap is lockable

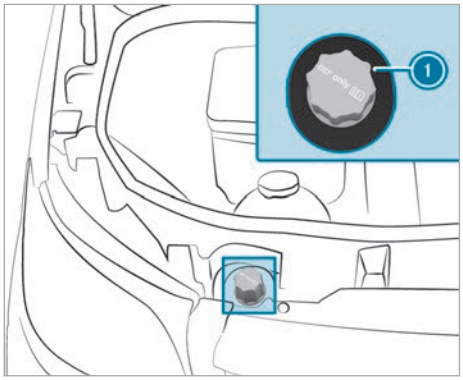

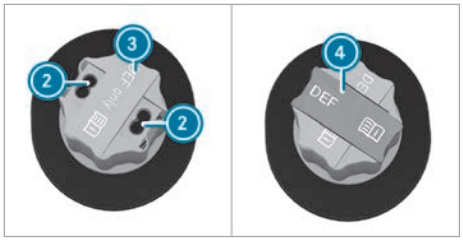

- Open the hood.
- Take the tool (4) for unlocking the DEF® filler cap (1) from the vehicle tool kit.
- Pull the cover (3) on the DEF® filler cap (1) up, turn 90° and release it.
- Insert the tool (4) in the holes (2) of the DEF® filler cap (1).
- Turn the DEF® filler cap (1) counter-clockwise and remove it.

Preparing the DEF® refill canister

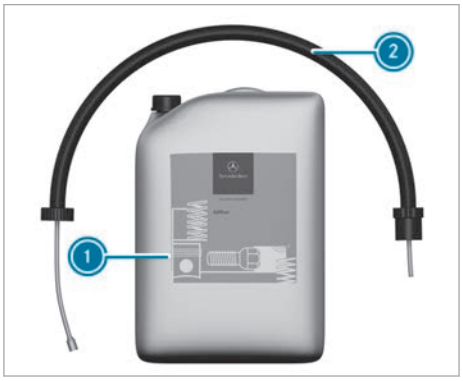

Variant 1

Variant 2

- Unscrew the cap on the DEF® refill canister (1).
- Screw the disposable hose (2) onto the opening of the DEF® refill canister (1) until hand-tight.

Topping up the DEF®

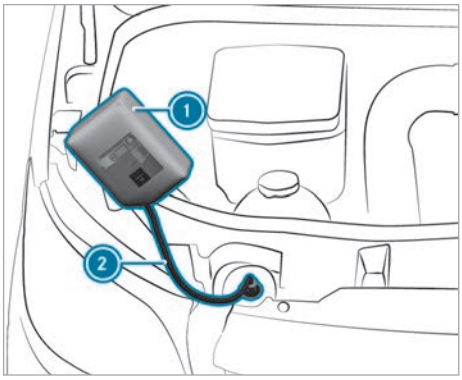

Variant 1

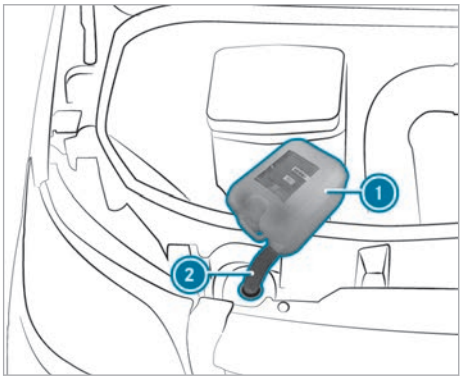

Variant 2

- Screw on hand-tight (variant 1) or insert (variant 2) the disposable hose (2) into the filler neck of the vehicle.
- Lift up and tip the DEF® refill canister (1).
  The filling process stops when the DEF® container is completely full.
  The DEF® refill canister (1) can be removed when it has been only partially emptied.
- Unscrew the disposable hose (2) and close the DEF® refill canister (1) in reverse order.
- Switch on the vehicle for at least 60 seconds.
- Start the vehicle.

ⓘ Avoid carrying DEF® refill containers permanently in the vehicle.

DEF® refill bottle

Only screw the DEF® refill bottle hand-tight onto the filler opening in the engine compartment. It may otherwise be damaged.

DEF® refill bottles (1) can be obtained at many gas stations or at a qualified specialist workshop. Refill bottles without a threaded cap offer no overfill protection. DEF® may leak out as a result of overfilling. Mercedes-Benz offers special refill bottles with a threaded cap. You can obtain these from an authorized Mercedes-Benz Center.

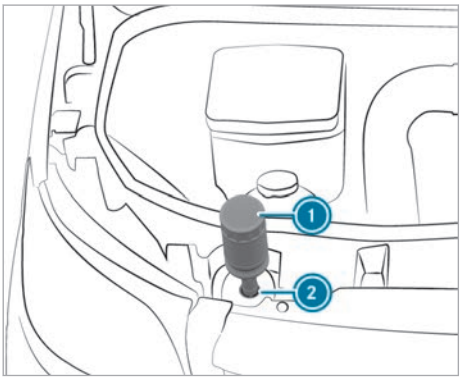

- Unscrew the protective cap from the DEF® refill bottle (1).
- Place the DEF® refill bottle (1) as shown on the filler opening (2) and screw it on clockwise until hand-tight.
- Press the DEF® refill bottle (1) toward the filler opening (2).
  The DEF® tank is filled. This could take up to one minute.

ⓘ When the DEF® refill bottle is no longer pressed down, filling stops. The bottle can be removed when it has been only partially emptied.

- Release the DEF® refill bottle ①.
- Turn the DEF® refill bottle ① counter-clockwise and remove it.
- Screw the protective cap onto the DEF® refill bottle ① again.

Filling procedure with the pump nozzle of an DEF® filling pump

- Insert the pump nozzle into the filler neck and add DEF®. When doing so, do not overfill the DEF® tank. You can also use an DEF® filling pump for trucks.

Closing the DEF® filler cap on fuel filler caps that are not lockable

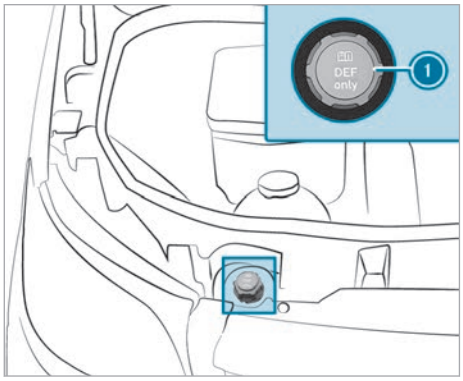

- After filling the DEF® tank, place the DEF® filler cap ① on the filler neck and tighten by turning it clockwise.
- Turn the DEF® fuel filler cap until the lettering is horizontal and can be read.
  The filler neck is only locked correctly when this is the case.
- Close the hood.

Closing the DEF® filler cap when the fuel filler cap is lockable

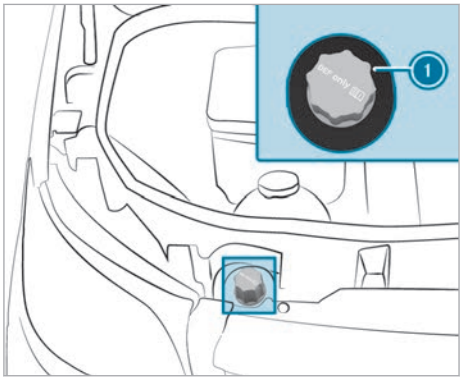

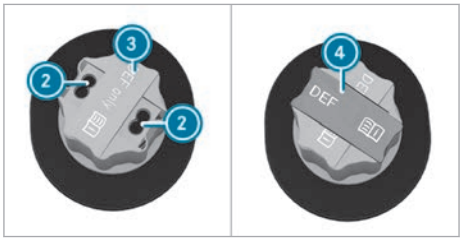

- After filling the DEF® tank, place the DEF® filler cap ① on the filler neck and tighten by turning it clockwise.
- Remove the tool ④ from the DEF® filler cap ① and store it in the vehicle tool kit.
- Pull the cover ③ on the DEF® filler cap ① up, rotate over the holes ② of the DEF® filler cap ①, and release.
- Turn the DEF® filler cap ①.
  If the DEF® filler cap ① turns freely, the DEF® tank is closed.

Parking

Parking the vehicle

⚠ **WARNING** Risk of fire caused by hot exhaust system parts

Flammable materials such as leaves, grass or twigs may ignite.

- Park the vehicle so that no flammable material can come into contact with hot vehicle components.

▶ In particular, do not park on dry grassland or harvested grain fields.

⚠ **WARNING** Risk of accident and injury due to children left unattended in the vehicle

If you leave children unattended in the vehicle, they could, in particular:

- open doors, thereby endangering other persons or road users.
- get out and be struck by oncoming traffic.
- operate vehicle equipment and become trapped, for example.

In addition, the children could also set the vehicle in motion by, for example:

- releasing the parking brake.
- changing the gearbox position.
- starting the vehicle.

▶ Never leave children unattended in the vehicle.

▶ When leaving the vehicle, always take the key with you and lock the vehicle.

▶ Keep the key out of reach of children.

⚠ **WARNING** Risk of accident and injury caused by an insufficiently secured vehicle rolling away

If the vehicle is not securely parked sufficiently, it can roll away in an uncontrolled way even at a slight downhill gradient.

▶ On uphill or downhill gradients, turn the front wheels so that the vehicle rolls towards the curb if it starts moving.

▶ Apply the parking brake.

▶ Switch the transmission to position P.

! **NOTE** Damage to the vehicle or the drivetrain due to rolling away

▶ Always park your vehicle safely and according to legal requirements.

▶ Always properly secure the vehicle against rolling away.

⚠ **WARNING** Risk of accident and injury if the parking brake is not applied.

The vehicle can roll away if the parking brake is not applied and you park the vehicle with the park position P engaged.

The engaged park position P is not a full substitute for the parking brake.

There is a risk of accident and injury.

▶ Secure the vehicle against rolling away as described below.

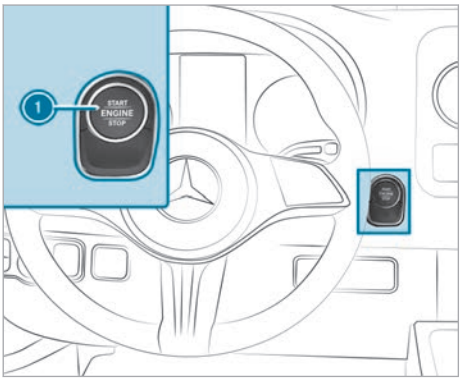

To correctly secure the vehicle against accidentally rolling away, observe the following points.

▶ Always apply the parking brake.

▶ **On gradients:** turn the front wheels towards the curb.

▶ **Vehicles with automatic transmission:** shift to transmission position P.

▶ Switch off the vehicle by pressing button 1.

▶ Get out of the vehicle and lock it.

▶ **On gradients:** secure the wheels on the rear axle with a chock or an object without any sharp edges.

Manual parking brake

Applying/releasing the parking brake lever

⚠ **WARNING** Risk of skidding or an accident by braking with the parking brake

If you have to brake your vehicle with the parking brake, the braking distance is considerably longer and the wheels may lock. There is an increased risk of skidding and/or accident.

- Only brake the vehicle with the parking brake if the service brake has failed.
- In this case, do not apply the parking brake with too much force.
- If the wheels lock, immediately release the parking brake as much as required for the wheels to turn again.

WARNING Risk of fire and an accident if the parking brake is not released

If the parking brake is not fully released when driving, the following situations can occur:

- The parking brake can overheat and cause a fire
- The parking brake can lose its holding function

- Completely release the parking brake before driving off.

The brake lights do not light up when you brake the vehicle with the parking brake.

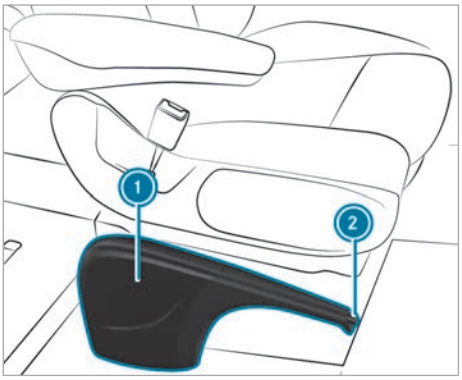

Generally, you may only apply the parking brake when the vehicle is stationary.

- **To apply the parking brake:** pull parking brake lever 1 up as far as the last possible detent. When the vehicle has been started, the PARK and (P) (USA) or (P) (Canada) indicator lamps in the instrument cluster light up. If the vehicle is in motion, a warning tone sounds.

ⓘ In vehicles with a folding parking brake lever, you can then press parking brake lever 1 down as far as it will go.

Releasing the parking brake

- **Folding parking brake lever:** first pull parking brake lever 1 upwards as far as it will go.
- Slightly pull parking brake lever 1 upwards and press release button 2.
- Lower parking brake lever 1 as far as it will go while pressing release button 2.
  The PARK and (P) (USA) or (P) (Canada) indicator lamps in the instrument cluster go out.

Flipping the parking brake lever up or down

Requirements:

- The parking brake lever is engaged.

- **To flip down:** push the parking brake lever down to the stop.
- **To flip up:** pull the parking brake lever up to the stop

Performing emergency braking with the parking brake lever

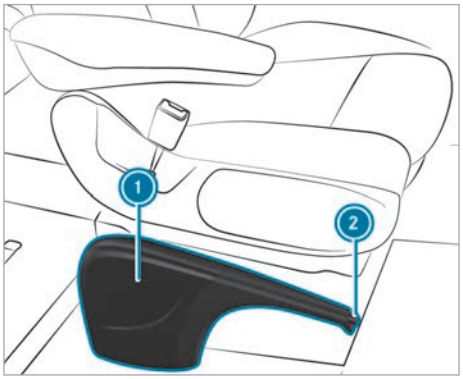

If, in exceptional cases, the service brake fails, you can use the parking brake to perform emergency braking.

- **Emergency braking:** press and hold release button 2 and carefully pull parking brake lever 1.

Electric parking brake

Information on the electric parking brake

WARNING Risk of accident and injury due to children left unattended in the vehicle

If you leave children unattended in the vehicle, they could, in particular:

- open doors, thereby endangering other persons or road users.
- get out and be struck by oncoming traffic.
- operate vehicle equipment and become trapped, for example.

In addition, the children could also set the vehicle in motion by, for example:

- releasing the parking brake.
- changing the gearbox position.
- starting the vehicle.

▶ Never leave children unattended in the vehicle.

▶ When leaving the vehicle, always take the key with you and lock the vehicle.

▶ Keep the key out of reach of children.

Observe the note on transporting animals in the vehicle (→ page 37).

For the automatic functions to work correctly, the driver must be seated in the correct seat position (→ page 68).

The function of the electric parking brake is dependent on the on-board electrical system voltage. If the on-board electrical system voltage is low or there is a malfunction in the system, the electric parking brake may not be able to be applied. In this case, the yellow [(P)] indicator lamp lights up.

In this case, park the vehicle in the following way:

- Park the vehicle on level ground and secure it to prevent it from rolling away.
- **Vehicles with automatic transmission:** shift the transmission to position [P].

ⓘ The electric parking brake is only actually applied when the red [PARK] and [(P)] (USA) indicator lamps or the red [(P)] (Canada) indicator lamps light up continuously.

It may not be possible to release a parking brake if the on-board electrical system voltage is low or if there is a malfunction in the system. Inform a qualified specialist workshop.

When the vehicle is stationary, the electric parking brake carries out a function test at regular intervals. Noises are normal in this process.

The automatic application of the parking brake only works after a previous journey.

Function of the electric parking brake

Vehicles with automatic transmission:

When the vehicle is switched off after a journey and the transmission is in position [P], the electric parking brake is automatically applied.

In addition, at least one of the following conditions must be fulfilled:

- The driver is not sitting in the driver's seat.
- The seat belt buckle is undone.

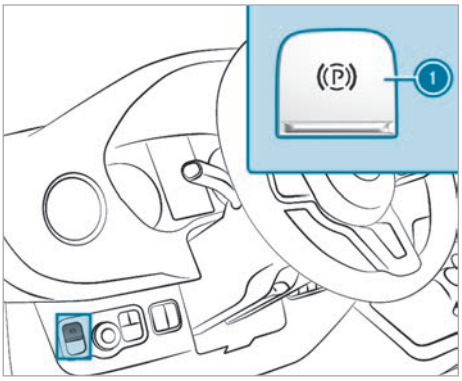

The electric parking brake is also automatically applied if Active Distance Assist DISTRONIC has brought the vehicle to a standstill and the driver is not sitting in the driver's seat.

The electric parking brake is also applied when the transmission is not in position [P], but the following situations occur:

- There is a system malfunction.
- The power supply is insufficient.
- The vehicle has been stationary for a longer time.

The red [PARK] and [(P)] (USA) or [(P)] (Canada) indicator lamps in the instrument cluster light up. The electric parking brake is only actually applied when the red [PARK] and [(P)] (USA) or [(P)] (Canada) indicator lamps light up continuously.

ⓘ To prevent the electric parking brake from applying automatically, pull switch ①.

Releasing the electric parking brake automatically

Vehicles with automatic transmission:

The electric parking brake of your vehicle is released when all of the following conditions are fulfilled:

- The driver is sitting in the driver's seat.
- The driver is belted.
- The vehicle has been started.
- Transmission position D or R is engaged and you depress the accelerator pedal.

  or

  You shift from transmission position P to transmission position D or R. You must depress the accelerator pedal for good measure when driving on steep uphill gradients.
- If transmission position R is engaged, the rear-end doors must be closed.

Applying/releasing the electric parking brake manually

WARNING Risk of accident and injury due to children left unattended in the vehicle

If you leave children unattended in the vehicle, they could, in particular:

- open doors, thereby endangering other persons or road users.
- get out and be struck by oncoming traffic.
- operate vehicle equipment and become trapped, for example.

In addition, the children could also set the vehicle in motion by, for example:

- releasing the parking brake.
- changing the gearbox position.
- starting the vehicle.

▶ Never leave children unattended in the vehicle.

▶ When leaving the vehicle, always take the key with you and lock the vehicle.

▶ Keep the key out of reach of children.

- Observe the "Notes on pets in the vehicle" (→ page 37).

▶ **To apply:** press switch (P) when the vehicle is stationary.
When the electric parking brake is applied, the red indicator lamps PARK and (P) (USA) or (P) (Canada) light up in the instrument cluster. The electric parking brake is only actually applied when the red indicator lamps PARK and (P) (USA) or (P) (Canada) light up continuously.

It is also possible to apply the electric parking brake when the vehicle is switched off.

▶ **To release:** pull the (P) switch.
The red indicator lamps PARK and (P) (USA) or (P) (Canada) in the instrument cluster go out.

You can only release the electric parking brake if the vehicle is switched on with the start/stop button.

Emergency braking

In the event of an emergency, you can brake the vehicle while it is in motion with the electric parking brake.

▶ While driving, press switch (P) of the electric parking brake.
The vehicle is braked as long as you keep switch (P) of the electric parking brake depressed.

The vehicle's brake lights light up.

The longer switch (P) for the electric parking brake is depressed, the greater the braking force.

During the braking procedure, you will receive the following feedback from the vehicle:

- A warning tone will sound.
- The Release Parking Brake message appears in the instrument cluster.
- The red indicator lamps PARK and (P) (USA) flash or the red indicator lamp (P) (Canada) flashes in the instrument cluster.

When the vehicle has been braked to a standstill, the electric parking brake is applied.

Temporarily storing the vehicle

NOTE Damage to the starter battery due to leaving the vehicle idle for extended periods of time

If the vehicle is not moved for a longer period, quiescent current can lead to excessive discharge of the starter battery and cause battery damage.

- Charge the starter battery if the voltage is below 12.2 V, for example, after driving for an extended period.
- Charge the starter battery every six months, even if it has been disconnected or is in standby mode.
- Check the starter battery condition of charge every four weeks if no trickle charger is being used.
- If possible, connect a trickle charger via a jump-start connection point.
- Consult a qualified specialist workshop to disconnect the battery or if you have any questions.

Temporarily storing the vehicle for over four weeks

- **Method 1:** connect the starter battery to a trickle charger via the jump-start connection.
- **Method 2:** interrupt the power supply by activating standby mode .
- **Method 3:** disconnect all batteries. For this, please contact a qualified specialist workshop.

Standby mode

Function of standby mode

If standby mode is activated, energy loss is minimized during extended non-operational periods.

Standby mode is characterized by the following:

- The starter battery is preserved.
- The maximum non-operational time appears in the instrument cluster.
- The connection to online services is interrupted.
- The ATA (anti-theft alarm system) is unavailable.

If the following conditions are met, standby mode can be activated or deactivated via the multimedia system:

- The vehicle is switched on.
- The vehicle has not been started.

Exceeding the vehicle's displayed non-operational time may cause inconvenience; i.e. it cannot be guaranteed that the starter battery will reliably start the vehicle.

Charge the starter battery in the following situations:

- You want to extend the vehicle's non-operational time.
- The state of charge of the starter battery is not sufficient for standby mode.

ⓘ Standby mode is automatically deactivated when the vehicle is switched on.

Using the chock

Use the chock to provide additional safety to prevent the vehicle from rolling away, e.g. when parking or changing a wheel.

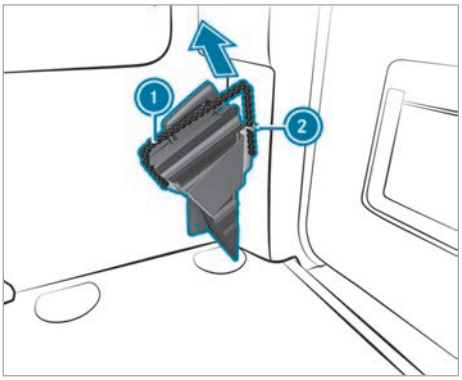

Chock in load/passenger compartment

- **To remove the chock:** pull holding rope ① slightly downwards and then remove it from holder ②.
- Remove the chock.

ⓘ When stowing it away, ensure that the chock is secured in the holder by holding rope ①.

Driving and driving safety systems

Notes on driving systems and your responsibility

Your vehicle is equipped with driving systems that assist you in driving, parking and maneuvering the vehicle. The driving systems are only aids. They are not a substitute for you paying attention to your surroundings and do not relieve you of your responsibility pertaining to road traffic law. The driver is always responsible for maintaining a safe distance to the vehicle in front, for vehicle speed, for braking in good time and for staying in lane. Always pay attention to the traffic and intervene

if necessary. Be aware of the limitations regarding the safe use of these systems.

Driving systems can neither reduce the risk of accident if you fail to adapt your driving style nor override the laws of physics. They cannot always take into account road, weather or traffic conditions.

ⓘ Some driving systems can regulate or limit the speed to a previously set value. If there is a change of drivers, make sure that you inform the new driver about the set cruise speed.

Information on vehicle sensors and cameras

Some driving systems and driving safety systems use cameras and radar or ultrasonic sensors to monitor the area in front of, behind or next to the vehicle.

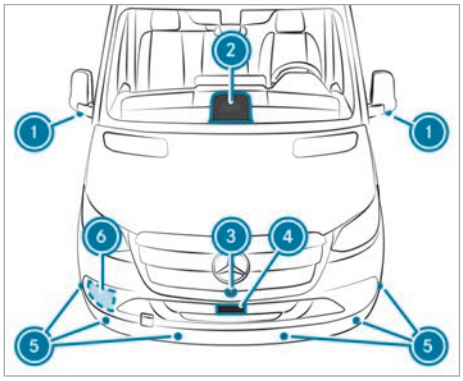

Front view (example)

1. Cameras in the outside mirrors
2. Multifunction camera
3. Front camera
4. Front radar
5. Ultrasonic sensors
6. Front radar for Sideguard Assist on front passenger side

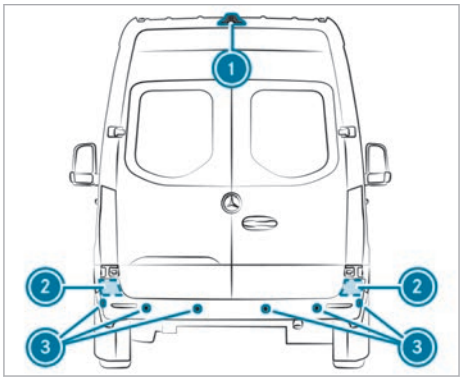

Rear view (example)

1. Reversing camera
2. Rear radar
3. Ultrasonic sensors

WARNING Risk of accident if the detection capability of the vehicle sensors or cameras is impaired

If the areas of the vehicle sensors or cameras are obscured, damaged or dirty, some driving and driving safety systems may no longer function correctly. There is a risk of an accident.

- Always keep the areas of the vehicle sensors and cameras clear of obstructions and clean.
- Have damage to the bumpers, radiator shell or stone chipping in the area of the cameras in the windshield repaired at a qualified specialist workshop.

Keep the areas of the cameras and sensors in particular free of dirt, ice and slush (→ page 230). The sensors and cameras must not be covered, and the detection ranges around them must be kept free. Do not attach an additional license plate bracket, advertisements, stickers, car films, or stone chip protection foils in the detection range of the sensors and cameras. Make sure that there are no overhanging loads protruding into the detection range.

In the event of damage, or following a severe impact, have the function of the sensors checked at a qualified specialist workshop. Have damage or stone chipping in the area of the cameras repaired at a qualified specialist workshop.

Overview of driving systems and driving safety systems

In this section, you will find information regarding the following driving systems and driving safety systems:

- ABS (Anti-lock Braking System) (→ page 147)
- BAS (Brake Assist System) (→ page 147)
- ASR (Anti-Slip Control) (→ page 148)
- EBD (Electronic Brakeforce Distribution) (→ page 149)
- ESP® (Electronic Stability Program) (→ page 148)
- ESP® Crosswind Assist (→ page 149)
- ESP® Trailer Stability Assist (→ page 149)
- Active Brake Assist (→ page 149)
- Hill Start Assist (→ page 157)
- HOLD function (→ page 157)
- DSR (Downhill Speed Regulation) (→ page 153)
- Cruise control (→ page 152)
- Active Distance Assist DISTRONIC (→ page 155)
- Active Lane Keeping Assist (→ page 176)
- Blind Spot Assist (→ page 172)
- Sideguard Assist(→ page 173)
- Moving-off Information Assist (→ page 175)
- ATTENTION ASSIST (→ page 166)
- Traffic Sign Assist (→ page 167)
- Drive Away Assist (→ page 170)
- Parking Assist PARKTRONIC (→ page 158)
- 360° camera (→ page 163)
- Close-range braking(→ page 171)
- Rear Cross Traffic Alert (→ page 172)
- Reversing camera (→ page 160)

ⓘ Availability of individual functions depends on the respective equipment and country of use.

Functions of ABS (anti-lock braking system)

Observe the important safety guidelines for the driving safety system.

ABS controls the brake pressure in critical situations:

- During braking, for instance, at maximum full-stop braking or if there is insufficient tire traction, the wheels are prevented from locking.
- The steerability of the vehicle in terms of physical possibilities is ensured when you are braking.
- ABS is active at speeds above approximately 3 mph (5 km/h). On a slippery road surface, ABS will intervene even if you brake only gently.

System limits

ABS may be impaired or may not function if a malfunction has occurred and the yellow ABS warning lamp lights up continuously on the instrument cluster after the vehicle is started.

If ABS intervenes, you will feel pulsations in the brake pedal. The pulsating brake pedal may be an indication of hazardous road conditions and functions as a reminder to take extra care while driving.

If ABS intervenes: keep the brake pedal firmly depressed until the braking situation has passed.

To carry out maximum full-stop braking: fully depress the brake pedal.

Function of BAS (Brake Assist System)

⚠ **WARNING** Risk of an accident caused by a malfunction in BAS (Brake Assist System)

If BAS is malfunctioning, the braking distance in an emergency braking situation is increased.

▶ Depress the brake pedal with full force in emergency braking situations. ABS prevents the wheels from locking.

BAS helps you by providing additional brake force in an emergency braking situation.

If you depress the brake pedal quickly, BAS will be activated:

- BAS will automatically boost the brake force of the brakes
- BAS can shorten the braking distance
- ABS will prevent the wheels from locking

When you release the brake pedal, the brakes will function as usual again. BAS will be deactivated.

Functions of ASR (acceleration skid control)

ASR can neither reduce the risk of an accident nor override the laws of physics if the driver does not pay attention when pulling away or accelerating. ASR is only an aid. Always adapt your driving style to suit the prevailing road and weather conditions.

ASR improves traction, i.e. the transfer of power from the tires to the road surface, for a sustained period and therefore also improves the driving stability of the vehicle. If the drive axle wheels start to slip, ASR brakes individual wheels on the drive axle and limits the engine torque. ASR thus significantly assists you when pulling away and accelerating, especially on wet or slippery roads.

If traction on the road surface is not sufficient, even ASR will not allow you to pull away easily. The type of tires and total weight of the vehicle as well as the gradient of the road also play a crucial role.

If ASR intervenes, the warning lamp in the instrument cluster flashes.

Function of ESP® (Electronic Stability Program)

Characteristics when ESP® is activated

Within the physical limits, ESP® can monitor and improve driving stability and traction in the following situations:

- when driving and pulling away on wet or slippery road surfaces
- when braking

If the vehicle is deviating from the direction desired by the driver, ESP® can intervene as follows to stabilize the vehicle:

- one or more wheels are systematically braked
- the engine output is adapted to suit the respective situation

ⓘ Only use the wheel/tire combination approved for your vehicle. This will ensure flawless functioning of the ESP®.

If the warning lamp flashes, then one or more wheels have reached their traction limit:

- adapt your driving style to suit the prevailing road and weather conditions
- do not deactivate ESP® under any circumstances
- only depress the accelerator pedal as far as is necessary when pulling away

If the warning lamp lights up continuously, ESP® is not available due to a malfunction.

Observe the following information:

- Indicator lamps and warning lamps (→ page 321)
- Display messages (→ page 298)

Characteristics when ESP® is deactivated

⚠ **WARNING** Risk of skidding if ESP® is deactivated

If you deactivate ESP®, ESP® cannot carry out vehicle stabilization.

▶ ESP® should only be deactivated in the following situations.

When ESP® is deactivated, the warning lamp lights up continuously.

If ESP® is deactivated, traction can be improved in the following situations:

- when using snow chains
- in deep snow
- on sand or gravel

ⓘ Spinning the wheels results in a cutting action, which enhances traction.

Observe the following points when ESP® is deactivated:

- vehicle stabilization is delayed and is significantly reduced in the lower speed range
- the drive wheels may start to spin
- traction control is still active

ⓘ If ESP® is deactivated, ESP® will still provide assistance during braking.

Activating/deactivating ESP® (Electronic Stability Program)

Multimedia system:

→ ⌂ ▸▸ Settings ▸▸ Assistance ▸▸ Collision Avoidance ▸▸ ESP

ⓘ ESP® can be activated/deactivated using quick-access when at least one other function is available in quick-access. Otherwise, you can find ESP® in the Assistance menu.

▶ Select ESP.
Information about ESP® appears.

▶ Select On or Off.

If the ESP® OFF warning lamp lights up constantly in the instrument cluster, ESP® is deactivated.

Observe the information on warning lamps and display messages which may appear in the instrument cluster.

Function of ESP® Crosswind Assist

ESP® Crosswind Assist detects sudden gusts of side wind and helps the driver to keep the vehicle in the lane:

- ESP® Crosswind Assist will be active at vehicle speeds above approximately 50 mph (80 km/h) when you are driving straight ahead or on a slight bend.
- The vehicle will be stabilized by means of individual brake intervention on one side. The instrument cluster will show a message with the traffic sign for a strong crosswind.

ESP® Crosswind Assist will not react in the following circumstances:

- The vehicle is subjected to severe jolts and vibrations, e.g. as a result of bumps or potholes.
- The vehicle loses traction, e.g. on snow or ice or when hydroplaning.

Function of ESP® Trailer Stability Assist

WARNING Risk of accident in poor road and weather conditions

In poor road and weather conditions, the trailer stabilization cannot prevent lurching of the vehicle/trailer combination. Trailers with a high center of gravity may tip over before ESP® detects this.

▶ Always adapt your driving style to suit the current road and weather conditions.

When you are driving with a trailer, ESP® Trailer Stability Assist can stabilise your vehicle if it begins to swerve from side to side:

- ESP® Trailer Stability Assist is active at speeds above approx. 40 mph (65 km/h).
- Minor swerving is reduced by a targeted, individual brake intervention on one side.
- In the event of severe swerving, the drive output is also reduced and all wheels are braked.

ESP® Trailer Stability Assist may be restricted or out of operation in the following circumstance:

- The trailer is not connected correctly or is not recognized correctly by the vehicle.

Function of EBD (Electronic Brakeforce Distribution)

EBD has the following characteristics:

- monitoring and controlling the brake pressure on the rear wheels
- improving driving stability when braking, especially on bends

Function of Active Brake Assist

Active Brake Assist comprises the following functions:

- Distance warning function
- Autonomous braking function with collision warning
- Situation-dependent brake force boosting

From a speed of approx. 4 mph (7 km/h), Active Brake Assist can help you to minimize the risk of a collision with vehicles, cyclists or pedestrians, or mitigate the consequences.

If Active Brake Assist has detected a risk of collision, a warning tone sounds and the warning lamp lights up on the instrument cluster display.

If you do not react to the collision warning, autonomous braking can be initiated in critical situations. In particularly critical situations, Active Brake Assist can initiate autonomous braking directly. In this case, the warning lamp and warning tone are activated simultaneously with the braking application.

If you apply the brake yourself in a situation detected as critical by Active Brake Assist, or apply the brake during the autonomous braking procedure, situation-dependent brake force boosting is implemented. The brake pressure increases up to maximum full-stop braking if necessary.

If an autonomous brake application or situation-dependent brake force boosting is implemented, the pop-up (1) appears on the instrument cluster display. It then automatically disappears after a short time.

WARNING Risk of an accident caused by limited detection performance of Active Brake Assist

Active Brake Assist cannot always clearly identify objects and complex traffic situations.

In such cases, Active Brake Assist might:

- Give a warning or brake without reason
- Not give a warning or not brake

Active Brake Assist is only an aid. The driver is responsible for maintaining a sufficiently safe distance to the vehicle in front, vehicle speed and for braking in good time.

▶ Always pay careful attention to the traffic situation; do not rely on Active Brake Assist alone.

▶ Be prepared to brake or swerve if necessary.

Observe the system limits of Active Brake Assist. Due to the nature of the system, complex but non-critical driving conditions may also cause Active Brake Assist to intervene during braking.

If Active Brake Assist has been deactivated manually or by another driving system, the warning lamp [OFF] lights up on the instrument cluster display.

If the system is not available due to soiled or damaged sensors, or a malfunction, the warning lamp [!] lights up on the instrument cluster display.

Distance warning function

From a speed of approx. 18 mph (30 km/h), the distance warning function issues a warning if the following conditions are met:

- The difference in speed between your own vehicle and the vehicle in front is a maximum of 18 mph (30 km/h).
- The distance to the vehicle in front is insufficient for the current travel speed.

In this case, the warning lamp [⚠] lights up on the instrument cluster display. If the distance to the vehicle in front is further reduced at higher speeds, the warning lamp [⚠] starts flashing.

You can set the timing of the distance warning to immediately after detection of the insufficient distance (early) or to when the distance has been insufficient for several seconds (moderate, late) (→ page 151).

Autonomous braking function with collision warning

The autonomous braking function may intervene at speeds from approximately 4 mph (7 km/h) in the following situations:

- at speeds up to approx. 155 mph (250 km/h) for vehicles and cyclists ahead or pedestrians walking along the road
- at speeds up to approx. 50 mph (80 km/h) for stationary vehicles
- at speeds up to approx. 43 mph (70 km/h) for crossing vehicles, pedestrians and cyclists
- when making a turn across the oncoming lane, before you leave your own lane, up to approx. 12 mph (20 km/h) if there are vehicles, pedestrians or two-wheelers approaching

ⓘ The response is limited in the case of stationary pedestrians and cyclists.
At speeds up to approx. 43 mph (70 km/h), Active Brake Assist only responds to oncoming vehicles in your own lane with autonomous braking just before a potential collision. This reduces the potential impact speed. It enables you to evade the oncoming vehicle in good time as long as this action can be executed safely.

Situation-dependent brake force boosting

The situation-dependent brake force boosting may intervene at speeds starting from approximately 4 mph (7 km/h) in the following situations:

- at speeds up to approx. 155 mph (250 km/h) for vehicles and cyclists in front or pedestrians walking along the road
- at speeds up to approx. 50 mph (80 km/h) for stationary vehicles
- at speeds up to approx. 43 mph (70 km/h) for crossing vehicles, pedestrians and cyclists

ⓘ The response is limited in the case of stationary pedestrians and cyclists.

Interruption of a brake application by Active Brake Assist

You can cancel a brake application by Active Brake Assist at any time by:

- demonstrably depressing the accelerator pedal or with kickdown
- releasing the brake pedal (only during situation-dependent brake force boosting)
- steering clear of the detected obstacle

If there is no longer a risk of collision or the obstacle ahead is no longer detected, Active Brake Assist automatically cancels the brake application.

Turning maneuver function

If the system detects a risk of collision with oncoming vehicles, pedestrians or two-wheelers when making a turn across the oncoming lane at speeds below approx. 12 mph (20 km/h), an autonomous braking intervention may be initiated before you have left your own lane.

System limits

Full system performance is not yet available for a few seconds after switching on the vehicle or after moving off. Depending on the surrounding conditions, it may take a few minutes for full system performance to become available.

The system may be impaired or inoperable in the following situations:

- in snow, rain, fog, heavy spray, glare, direct sunlight or changing light conditions
- if the sensors are soiled, fogged up, damaged or covered
- if the sensors are impaired owing to interference from other radar sources, e.g. strong radar reflections in parking garages
- if a loss of tire pressure or a defective tire has been detected and indicated
- if DSR is activated
- in complex traffic situations where objects cannot always be clearly identified
- if pedestrians or vehicles move quickly into the sensor detection range
- if pedestrians are obscured by other objects
- if the typical outline of a pedestrian cannot be distinguished from the background
- if a pedestrian is not detected as such, e.g. owing to special clothing or other objects
- on tight bends

Setting Active Brake Assist

Requirements:

- The vehicle is switched on.

Multimedia system:

→ [⌂] ▸▸ Settings ▸▸ Assistance ▸▸ Collision Avoidance ▸▸ Active Brake Assist

The following settings are available:

- Early
- Medium
- Late
- Off

ⓘ It is recommended that Active Brake Assist always be left activated.

▶ Select a setting.

The last active setting is selected automatically each time the vehicle is started.

Exception: if the last setting was Off, the Medium setting will be automatically activated the next time the vehicle is started.

Deactivating Active Brake Assist

ⓘ It is recommended that Active Brake Assist always be left activated.

▶ Select Off.
The distance warning function and autonomous braking function can only be switched off when stationary and at speeds up to 6 mph (10 km/h).

ⓘ If Active Brake Assist is switched off, Emergency Stop Assist and the distance warning function are also deactivated.

When the vehicle is next started, the Medium setting will be activated automatically.

ⓘ If Active Brake Assist is deactivated, the [OFF] symbol appears on the status bar of the instrument cluster.

Cruise control

Function of cruise control

Cruise control regulates the speed to the value selected by the driver.

If you accelerate to overtake, forexample, the stored speed is not deleted. If you remove your foot from the accelerator pedal after overtaking, cruise control will resume speed regulation back to the stored speed.

You can store any speed above 13 mph (20 km/h) up to the maximum design speed or up to the stored winter tire limit.

Observe the information on driving systems and be aware of your personal responsibility, otherwise you may fail to recognize potential dangers (→ page 145).

Notifications on the instrument cluster display

[ ] **Gray:** cruise control is selected but not yet active or temporarily in passive mode.

[ ] **Green:** cruise control is activated.

A stored speed is shown alongside the display [ ] and is indicated in the speedometer.

System limits

Cruise control may be unable to maintain the stored speed on uphill gradients. The stored speed is resumed when the uphill gradient evens out and the vehicle's speed does not fall below 13 mph (20 km/h).

On long and steep downhill gradients, you must shift down to a lower gear in good time. This is particularly important when driving a heavily-laden vehicle. You are thus making full use of the engine's braking effect. This will take some of the strain off the brake system and prevent the brakes from overheating and wearing too quickly.

Do not use cruise control in the following situations:

- in traffic situations that require frequent changes of speed, e.g. in heavy traffic, on winding roads
- off-road or on construction sites
- on slippery or slick roads, as the drive wheels can lose traction when accelerating and the vehicle can then begin skidding
- if there is poor visibility

Operating cruise control

⚠ **WARNING** Risk of accident due to stored speed

If you call up the stored speed and this is lower than your current speed, the vehicle decelerates.

▶ Take into account the traffic situation before calling up the stored speed.

Requirements:

- The transmission is in position [D].
- Travel speed is at least 15 mph (20 km/h).
- ESP® is activated, but not intervening.
- Cruise control is selected.

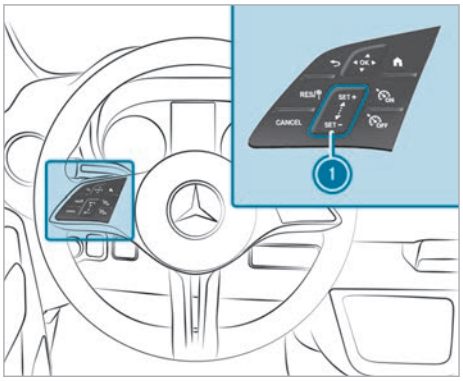

Steering wheel control panel for cruise control

[RES/]	Adopts the stored/detected speed
[CANCEL]	Deactivates cruise control
(1) [SET +] [SET -]	Control panel to increase/decrease speed
[ON]	Activates cruise control
[OFF]	Deactivates cruise control

Activating cruise control

▶ Press [ON].

Activating cruise control

▶ Press [SET +] or [SET -] on the control panel (1). The current speed is stored and maintained by the vehicle.

or

▶ Press RES/.
The last stored speed is called up and maintained by the vehicle.

The current travel speed is stored if the last stored speed has been deleted.

ⓘ When you switch off the vehicle, the last stored speed is deleted.

Increasing/decreasing the stored speed

▶ **To increase:** Swipe across the switch panel ① from the bottom up.
- The stored speed is increased by 1 mph (1 km/h).

▶ **To decrease:** Swipe across the switch panel ① from the top down.
- The stored speed is decreased by 1 mph (1 km/h).

▶ **To decrease:** Swipe across the switch panel ① from the top down.
- The stored speed is decreased by 1 mph (1 km/h).

or

▶ Briefly press SET + or SET - on the control panel ①.

The stored speed is increased or decreased to the following values according to the respective unit:

- **mph:** the next value ending in 5 or 0
- **km/h:** the next value ending in 0

or

▶ Accelerate the vehicle to the desired speed.

▶ Press SET + on the control panel ①.

Adopting a detected speed

If cruise control is activated and Traffic Sign Assist has detected a traffic sign with a maximum permissible speed and this is displayed on the driver display:

▶ Press RES/.
The maximum permissible speed shown by the traffic sign is stored, and the vehicle maintains this speed.

Deactivates cruise control

▶ Press CANCEL.

Deactivates cruise control

▶ Press OFF.

ⓘ If you brake, deactivate ESP®, or if ESP® intervenes, cruise control is deactivated.

Setting a speed limit for winter tires

Multimedia system:

→ ⌂ ▸▸ Settings ▸▸ Vehicle ▸▸ Winter Tire Limit

▶ Select a speed or deactivate the function.

DSR (Downhill Speed Regulation)

Notes on DSR

⚠ **WARNING** Risk of skidding and accident when DSR is activated on slippery road surfaces

If the driven speed and the target speed differ, the wheels may lose traction.

▶ Take into account the road surface and the difference between the driving speed and target speed before activating DSR.

DSR assists you with driving downhill. DSR maintains a set speed for you on downhill gradients by applying the brakes as required.

You are always responsible for keeping control of the vehicle and for assessing whether the downhill gradient can be negotiated. Depending on road surface conditions and tires, DSR may not always be able to maintain the target speed. Select a target speed suitable for the ambient conditions and also apply the brakes yourself if required.

Observe the notes on driving systems and your responsibility; you may otherwise fail to recognize dangers (→ page 145).

When DSR is switched on, it will control the vehicle speed. The target speed can be set to a value between 2 mph (4 km/h) and 11 mph (18 km/h) using the brake and accelerator pedal or the control panel on the steering wheel. By braking or accelerating, you can drive at a lower or higher speed than the target speed at any time.

DSR control will activate automatically in the following situations:

- If the vehicle is stationary, or its speed is less than 2 mph (4 km/h), the speed is set to 2 mph (4 km/h) or it is set to the minimum speed for the respective gear range.
- If you drive downhill at less than 11 mph (18 km/h), DSR will set the speed to the previously set speed.
- If you exceed 28 mph (45 km/h), DSR will switch off automatically.

The [DSR] Off message will appear on the instrument cluster and the status indicator will disappear. You will also hear a warning tone.

Activating/deactivating DSR

Requirements

- You are driving at a speed less than 25 mph (40 km/h) or the vehicle is stationary.

  If the vehicle speed is too high, a message reading Do Not Exceed 25 mph will appear on the instrument cluster display.
- Active Distance Assist DISTRONIC is deactivated.

Activating

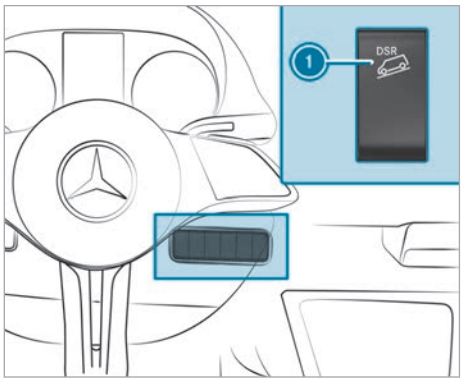

You can activate DSR when the vehicle is stationary or moving.

▶ Press the upper section of switch 1.
If the symbol [DSR] appears on the instrument cluster display, DSR is switched on.

Deactivating

▶ Press the upper section of switch 1.

or

▶ Accelerate and drive at a speed greater than 28 mph (45 km/h).

DSR will deactivate automatically in the following situations:

- As soon as you exceed a speed of 28 mph (45 km/h).
- If there is a malfunction in the ESP® or ABS system.

Changing the target speed

Change target speed with brake pedal or accelerator pedal

▶ Brake or accelerate the vehicle to the desired speed between 2 mph (4 km/h) and 11 mph (18 km/h).

▶ Release the brake pedal or accelerator pedal. The current speed is stored. When the vehicle is stationary, 2 mph (4 km/h) or the minimum possible speed for each gear range will be stored. DSR will maintain the stored speed on the downhill gradient and will brake automatically.

The set target speed is shown under the green status display [DSR] on the instrument cluster display.

Change target speed with the control panel on the steering wheel

The target speed can be increased or decreased only after the currently set target speed has been reached.

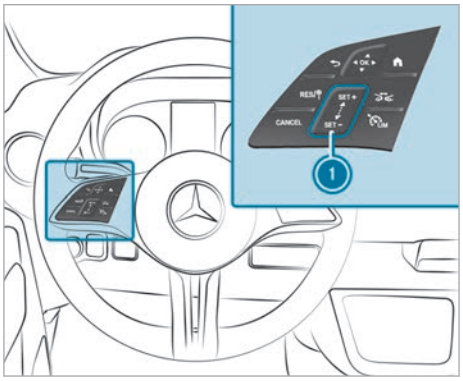

▶ **To increase the target speed:** swipe the control panel 1 from the bottom up.
The target speed is increased by 1 mph (1 km/h).

or

▶ At the top of the control panel 1, press [SET +] and hold pressed.
The target speed is increased in 1 mph (1 km/h) increments.

▶ **To decrease the target speed:** swipe the control panel 1 from the top down.
The target speed is decreased by 1 mph (1 km/h).

or

▶ At the top of the control panel ①, press SET - and hold pressed.
The target speed is decreased in 1 mph (1 km/h) increments.

The set target speed is shown alongside the status display on the instrument cluster display.

Active Distance Assist DISTRONIC

Function of Active Distance Assist DISTRONIC

Active Distance Assist DISTRONIC is only available for vehicles with automatic transmission.

Active Distance Assist DISTRONIC maintains the set speed on a free-flowing road. If vehicles are detected ahead the set distance is maintained, if necessary until the vehicle comes to a standstill. The vehicle is accelerated or braked in correlation with the distance to the vehicle in front and with the set speed.

Speed and distance are set and stored on the steering wheel.

Available speed range: 13 mph (20 km/h) - 100 mph (160 km/h)

Other features of Active Distance Assist DISTRONIC:

- Initiation of acceleration to the stored speed if the turn signal indicator is switched on to change to the overtaking lane.

Notifications of Active Distance Assist DISTRONIC on the instrument cluster display

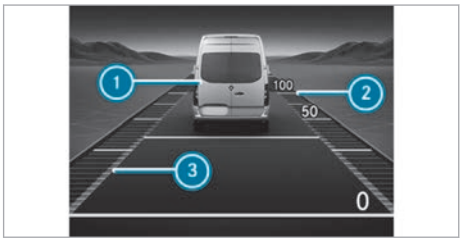

Assistance graphic (example)

① Vehicle in front
② Distance indicator
③ Set specified distance

The vehicle detected in front ① is highlighted in green. It may also be in the lane to the right of your vehicle in situations where it is not permitted to overtake on the left, forexample, on UK highways.

Permanent status display

Gray: Active Distance Assist DISTRONIC selected but not yet active.

Green speedometer, gray vehicle: Active Distance Assist DISTRONIC active, speed set.

Green: Active Distance Assist DISTRONIC active and vehicle detected.

The stored speed is shown under the permanent status display and indicated on the speedometer. Active Distance Assist DISTRONIC's status display is grayed out when in passive mode.

If the speed of the vehicle in front or the ascertained target speed due to the route event ahead is less than the stored speed, the segments in the speedometer light up.

If you increase or decrease the specified distance ③, the notification appears briefly.

ⓘ DISTRONIC starts up again automatically within 3 seconds. The green vehicle symbol is displayed cyclically when the vehicle is ready to pull away.

ⓘ The system can be switched to passive mode by depressing the accelerator pedal while Active Distance Assist DISTRONIC is active. The message Passive appears briefly on the instrument cluster display.

System limits

The system may be impaired or inoperative in the following situations, forexample:

- In snow, rain, fog, heavy spray, if there is glare, in direct sunlight or in greatly varying ambient light.
- If the windshield in the area of the camera is dirty, fogged up, damaged or covered.
- If there is dirt on the radar sensors or if the radar sensors are covered.
- In a parking garage or on roads with steep uphill or downhill gradients.
- If there are narrow vehicles in front, such as bicycles or motorcycles.

Additionally, braking or accelerating on slippery or slick roads can cause one or several wheels to lose traction and the vehicle could then begin skidding.

Do not use Active Distance Assist DISTRONIC in these situations.

WARNING Risk of accident from acceleration or braking by Active Distance Assist DISTRONIC

Active Distance Assist DISTRONIC may accelerate or brake in the following cases, for example:

- If the vehicle pulls away using Active Distance Assist DISTRONIC.
- If the stored speed is called up and is considerably faster or slower than the currently driven speed.
- If Active Distance Assist DISTRONIC no longer detects a vehicle in front or does not react to relevant objects.

▶ Always carefully observe the traffic conditions and be ready to brake at all times.

▶ Take into account the traffic situation before calling up the stored speed.

WARNING Risk of accident due to insufficient deceleration by Active Distance Assist DISTRONIC

Active Distance Assist DISTRONIC brakes your vehicle with up to 50% of the possible deceleration. If this deceleration is not sufficient, Active Distance Assist DISTRONIC alerts you with a visual and acoustic warning.

▶ Adjust your speed and maintain a suitable distance from the vehicle in front.

▶ Brake the vehicle yourself and/or take evasive action.

WARNING Risk of accident if detection function of Active Distance Assist DISTRONIC is impaired

Active Distance Assist DISTRONIC does not react or has a limited reaction:

- when driving on a different lane or when changing lanes
- to pedestrians, animals, bicycles or stationary vehicles, or unexpected obstacles
- to complex traffic conditions
- to oncoming vehicles and crossing traffic

As a result, Active Distance Assist DISTRONIC may neither give warnings nor intervene in such situations.

▶ Always observe the traffic conditions carefully and react accordingly.

Operating Active Distance Assist DISTRONIC

Requirements

Active Distance Assist DISTRONIC:

- The parking brake has been released.
- ESP® is activated and is not intervening.
- The transmission is in position D.
- The doors and the rear-end doors are closed.
- Checking of the radar sensor system has been successfully completed.
- The driver's seat belt is fastened.
- DSR is deactivated.

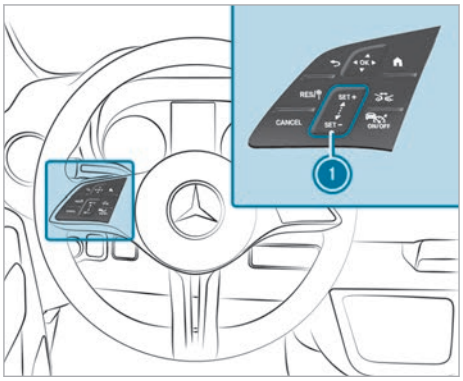

RES/	Adopts the stored/detected speed
CANCEL	Deactivates Active Distance Assist DISTRONIC
1 SET + SET -	Control panel to increase/decrease speed
	Increases/decreases the specified distance
ON/OFF	Activates/deactivates Active Distance Assist DISTRONIC

▶ **To operate Active Distance Assist DISTRONIC:** press the respective button with only one finger or swipe across the control panel.

Activates/deactivates Active Distance Assist DISTRONIC

▶ Press ON/OFF.

Activating Active Distance Assist DISTRONIC

▶ **To activate without a stored speed:** press the control panel 1 at the top SET + or at the

bottom SET - or press RES/. Remove your foot from the accelerator pedal.

or

▶ **To activate with a stored speed:** press RES/. Remove your foot from the accelerator pedal. The last stored speed is called up and maintained by the vehicle.

If the stored speed has been deleted, the current vehicle speed is stored.

Increasing or decreasing the stored speed

▶ **To increase:** swipe the control panel (1) from the bottom up.
The speed is increased by 1 mph (1 km/h).

▶ **To decrease:** swipe the control panel (1) from the top down.
The speed is decreased by 1 mph (1 km/h).

or

▶ Press SET + or SET - briefly on the control panel (1).
The speed is increased or decreased by 5 mph (10 km/h).

or

▶ Press and hold SET + or SET - on the control panel (1).
The speed is increased or decreased in 5 mph (10 km/h) increments.

or

▶ Accelerate the vehicle to the desired speed.

▶ Press SET + on the control panel (1).

Pulling away with Active Distance Assist DISTRONIC

▶ Activate Active Distance Assist DISTRONIC and remove your foot from the brake pedal.

▶ Press RES/.

or

▶ Depress the accelerator pedal briefly and firmly.
The functions of Active Distance Assist DISTRONIC remain active.

Reducing or increasing the specified distance from the vehicle in front

▶ Press .
The notification appears. The specified distance is reduced by one level.

If the lowest level is already selected, the selection jumps to the highest level.

Deactivates Active Distance Assist DISTRONIC

⚠ **WARNING** Risk of an accident due to Active Distance Assist DISTRONIC being active when you leave the driver's seat

If you leave the driver's seat while the vehicle is being braked by Active Distance Assist DISTRONIC only, the vehicle can roll away.

▶ Always deactivate Active Distance Assist DISTRONIC and secure the vehicle to prevent it from rolling away before you leave the driver's seat.

▶ Press CANCEL.

ⓘ If you brake, deactivate ESP® or if ESP® intervenes, Active Distance Assist DISTRONIC is deactivated.

Information on Hill Start Assist

Hill Start Assist holds the vehicle for a short time when pulling away on a hill under the following conditions:

- **Vehicles with automatic transmission:** the transmission is in position D or R.
- The parking brake has been released.

This gives you enough time to move your foot from the brake pedal to the accelerator pedal and depress it before the vehicle begins to roll.

⚠ **WARNING** Risk of accident and injury due to the vehicle rolling away

After a short time, Hill Start Assist no longer holds the vehicle.

▶ Swiftly move your foot from the brake pedal to the accelerator pedal. Do not leave the vehicle when it is being held by Hill Start Assist.

HOLD function

Notes on the HOLD function

Function

The HOLD function is available only for vehicles with automatic transmission.

The HOLD function holds the vehicle at a standstill without you needing to depress the brake pedal, e.g. when pulling away on a slope or when waiting in traffic. When you depress the accelerator pedal

to pull away, the braking effect is canceled and the HOLD function is deactivated.

The HOLD function is only an aid. Responsibility for keeping the vehicle safely at a standstill remains with the driver.

System limits

The HOLD function is intended only to provide assistance during driving operation and is not an adequate means of securing the stationary vehicle against rolling away.

The incline cannot be greater than 30%.

Activating/deactivating the HOLD function

WARNING Risk of an accident due to the HOLD function being active when you leave the vehicle

If the vehicle is only braked with the HOLD function it could, in the following situations, roll away:

- If there is a malfunction in the system or in the power supply.
- If the HOLD function is deactivated by depressing the accelerator pedal or brake pedal, e.g. by a vehicle occupant.

▶ Always secure the vehicle against rolling away before you leave it.

Requirements:

- The vehicle is stationary.
- The vehicle has been started.
- The driver is seated and belted.
- The electric parking brake is released.
- The transmission is in position D, R or N.

Activating the HOLD function

▶ Depress the brake pedal until the symbol HOLD is displayed in the instrument cluster.

▶ Release the brake pedal.

ⓘ If depressing the brake pedal the first time does not activate the HOLD function, wait briefly and then try again.

Deactivating the HOLD function

▶ Depress the accelerator pedal to move off.

or

▶ Depress the brake pedal until the symbol HOLD in the instrument cluster disappears.

ⓘ After a short period of time, the transmission shifts to position P to relieve the load on the service brake.

When the HOLD function is activated, the transmission automatically shifts to position P in the following situations:

- The driver unbuckles the seat belt and leaves the driver's seat.
- The driver's door is opened.
- The vehicle is switched off.

Parking Assist PARKTRONIC

Function of Parking Assist PARKTRONIC

Parking Assist PARKTRONIC is an electronic parking assistance system that monitors the area surrounding your vehicle. The distance between your vehicle and a detected obstacle is displayed visually and audibly.

The passive side impact protection also warns you of obstacles to the side. These must be detected beforehand by the sensors in the front or rear bumper while driving past them. If you steer in the direction of a detected obstacle and there is a risk of lateral collision, a warning is issued.

In order for obstacles to the side at the front or rear to be displayed, the vehicle must first travel a distance of at least half a vehicle length. Once the vehicle has travelled a distance of one vehicle length, obstacles on all sides can be shown.

Parking Assist PARKTRONIC serves solely as an aid. It is not a substitute for you having to pay attention to your surroundings. The responsibility for safe maneuvering, parking and exiting parking spaces remains with you. Ensure that no persons, animals, objects, etc. are in the maneuvering area while maneuvering and parking in / exiting parking spaces.

Indications in the media display

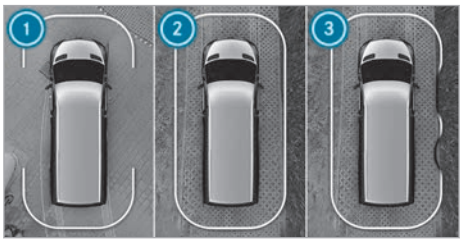

Example: vehicles with 360° camera

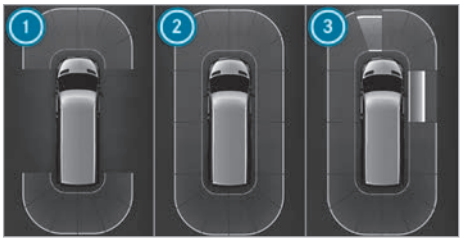

Example: vehicles with reversing camera

1. Ready for display at the front and rear
2. Ready for display all around
3. Ready for display all around and obstacles detected

As soon as Parking Assist PARKTRONIC is ready for display, the respective areas 1 to 3 of the display are shown in blue.

The color of the display changes depending on the distance to the detected obstacle:

- **Blue:** > 3.3 ft (1 m) (no obstacles detected)
- **Yellow:** approximately 3.3 ft (1 m) - 2.3 ft (0.7 m)
- **Orange:** approximately 2.3 ft (0.7 m) - 1.3 ft (0.4 m)
- **Red:** < 1.3 ft (0.4 m)

Vehicles with 360° camera: the boundary line shifts dynamically depending on the position and distance of the obstacles detected.

An intermittent warning tone also sounds depending on the distance to the obstacle detected. You can set the timing of the warnings in the multimedia system. In the Warn Early setting, the system warns you from a distance of 3.3 ft (1 m). In the standard setting, from a shorter distance of 1.3 ft (0.4 m).

Example: vehicles with 360° camera

Example: vehicles with reversing camera

If you are not in the Camera & Parking menu and an obstacle in the vehicle's path is detected, a pop-up window 1 appears in the media display up to a speed of 8 mph (12 km/h).

System limits

Parking Assist PARKTRONIC does not necessarily take into account the following obstacles:

- Obstacles below the detection range, e.g. persons, animals or objects.
- Obstacles above the detection range, e.g. protruding loads, overhangs or loading ramps of trucks.
- Pedestrians or animals approaching the vehicle from the side.
- Objects placed next to the vehicle.

Obstacles on the sides are not shown in the following situations, for example:

- You park the vehicle and switch it off.
- You open the doors.

After the vehicle is restarted, obstacles must be detected again by driving past them before a new warning can be issued.

Observe also the system limits of the following systems:

- Reversing camera (→ page 160)
- 360° camera (→ page 163)

Observe the information on vehicle sensors and cameras, otherwise the system cannot function properly (→ page 146).

Vehicles with trailer hitch: If a transport device, e.g. trailer or bicycle rack, is attached to the trailer hitch and the electrical connection is established correctly, Parking Assist PARKTRONIC is deactivated for the rear zone.

Problems with Parking Assist PARKTRONIC
If the Parking Assist PARKTRONIC display lights up red for approximately three seconds and then goes out, and the [P OFF] symbol appears on the instrument cluster display, the system may have been deactivated due to signal interference. Start the vehicle again and check whether Parking Assist PARKTRONIC works in a different location.

If a warning tone also sounds, this may be due to the following:

- **The sensors are dirty:** clean the sensors (→ page 230).
- **License plates or other detachable parts in the vicinity of the sensors are not correctly fastened:** Check the license plate or the detachable parts to ensure that they are securely fixed.
- **Parking Assist PARKTRONIC has been deactivated due to a malfunction:** restart the vehicle. If the problem persists, consult a qualified specialist workshop.

Deactivating/activating Parking Assist PARKTRONIC

NOTE Vehicle damage during parking or maneuvering due to objects at close range

Parking Assist PARKTRONIC may not detect certain objects close to the vehicle.

▶ When parking or maneuvering, look out in particular for objects that are underneath or above the sensors, e.g. flower pots or drawbars. Otherwise, the vehicle or other objects could be damaged.

Multimedia system:

→ [⌂] ▸▸ Settings ▸▸ Quick-Access

▶ Select PARKTRONIC On.
The function is activated or deactivated according to the previous setting.

ⓘ Parking Assist PARKTRONIC is automatically activated upon vehicle start.

Rear-view camera

Function of the reversing camera

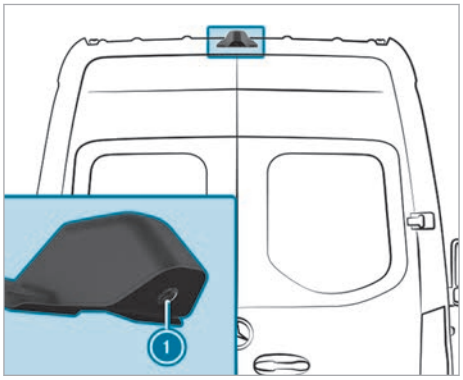

Dynamic guide lines show the vehicle's path for the current steering movement. This helps you with orientation and to avoid obstacles when reversing.

If the vehicle is switched on with the reverse gear engaged, or if the rear-end doors are opened, the image from the reversing camera is shown on the media display.

This allows the area behind the vehicle to be monitored.

When the rear-end doors are closed, the image from the reversing camera is switched off after approximately ten seconds.

The reversing camera serves solely as an aid. It is not a substitute for you having to pay attention to your surroundings. You are responsible for safe maneuvering and parking at all times. Ensure that there are no people, animals or objects etc. in the maneuvering area while maneuvering and parking.

The reversing camera may show a distorted view of obstacles, show them incorrectly, or even omit them altogether. The reversing camera cannot show all objects in immediate proximity to, or beneath the rear bumper.

ⓘ The area behind the vehicle is displayed as a mirror image, as it would appear in the inside mirror.

Vehicles without Parking Package

Camera perspectives on the media display

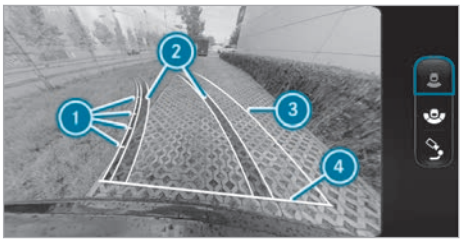

Example

1. Guide lines at a distance of approximately 1.6 ft (0.5 m), 3.3 ft (1.0 m), 5 ft (1.5 m) and 9.9 ft (3.0 m) from the rear area
2. Path marking the course the wheels will take with the current steering angle (dynamic)
3. Driven surface depending on the current steering angle (dynamic)
4. Guide line at a distance of approximately 1.0 ft (0.3 m) from the rear area

Wide-angle view

Example

1. Activating

Trailer view

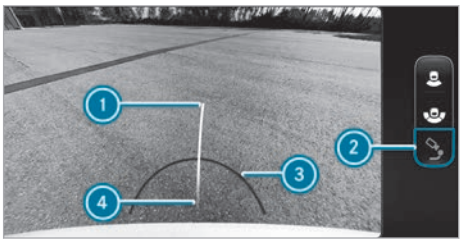

Example

1. Yellow guide line, locating aid
2. Switching on the trailer view
3. Red guide line at a distance of approximately 1.0 ft (0.3 m) from the ball head of the trailer hitch
4. Ball head of the trailer hitch

Pedestrian braking function

ⓘ This function is only available in vehicles without the Parking Package. Vehicles with the Parking Package are equipped with maneuvering assistant functions (→ page 170).

The pedestrian braking function can prevent collisions with pedestrians when reversing at slow speeds. If the reversing camera detects a person in the vehicle's path, the vehicle can be braked to a standstill.

The pedestrian braking function can intervene under the following conditions:

- The vehicle is reversing at a speed slower than 6 mph (10 km/h).
- The camera image is shown on the media display.

When automatic braking is triggered, the symbol appears in red in the camera image.

In addition, the message Pedestrian! For Emerg. Braking Off: Tap Here appears.

The driver can close or ignore this message. Pedestrian braking then remains active. When the driver taps the message, pedestrian braking is momentarily deactivated.

In the following situations, the pedestrian braking function is activated again:

- The vehicle is traveling forward faster than 10 mph (16 km/h).
- The vehicle is switched off and then back on again.

ⓘ If the function is unavailable or deactivated, the symbol appears in gray in the camera image.

The pedestrian braking function serves solely as an aid. It is not a substitute for you having to pay attention to your surroundings. The responsibility for safe maneuvering, parking and exiting parking spaces remains with you at all times. Ensure that no persons, animals, objects, etc. are in the vehicle path.

WARNING Risk of accident caused by limited detection of the pedestrian braking function

The pedestrian braking function cannot always clearly detect people. Other obstacles are not detected by the function.

In these cases, the function may brake unnecessarily or not brake at all.

- Always pay careful attention to the traffic situation; do not rely on the pedestrian braking function alone.
- Be ready to brake.

In the following situations, the pedestrian braking function is not available:

- on uphill gradients
- if transport equipment, e.g. a trailer or bicycle rack, is attached to the trailer hitch and the electrical connection has been correctly established
- if the reversing camera is not operational

Please also note the system limits of the reversing camera.

Vehicles with Parking Package

The following camera perspectives are available in the media display:

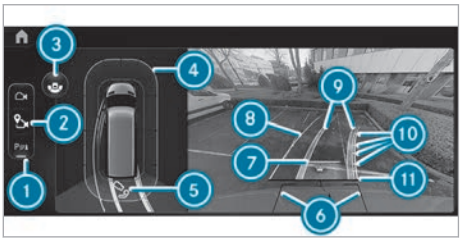

Camera Views menu (standard view)

1. Activates/deactivates Parking Assist PARKTRONIC
2. Sets the GPS activation point (→ page 166)
3. Switches between wide-angle view and standard view for the reversing camera
4. Warning display of Parking Assist PARKTRONIC (→ page 158)
5. Switching between standard view and trailer view (depending on the respective equipment)
6. Red guide lines at a distance of approximately 8 in (0.2 m) from the rear area, vehicle width including outside mirrors
7. Area required (shaded) with guide line to open the rear-end doors fully
8. Driven surface depending on the current steering angle (dynamic)
9. Path marking the course the wheels will take with the current steering angle (dynamic)
10. Guide lines at a distance of approximately 3.3 ft (1.0 m), 4.9 ft (1.5 m), 6.6 ft (2.0 m) and 9.8 ft (3.0 m) from the rear area
11. Guide line at a distance of approximately 1.0 ft (0.3 m) from the rear area

Wide-angle view (example)

1. Activates/deactivates Parking Assist PARKTRONIC
3. Switches between wide-angle view and standard view for the reversing camera
4. Warning display of Parking Assist PARKTRONIC (→ page 158)

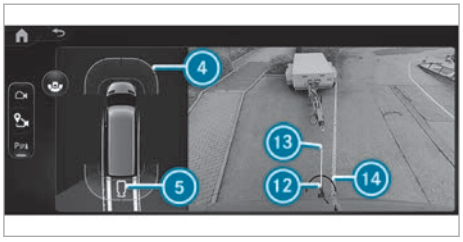

Trailer view (example)

4. Warning display of Parking Assist PARKTRONIC (→ page 158)
5. Switches between standard view and trailer view (depending on the respective equipment)
12. Ball head of the trailer hitch
13. Yellow guide line, locating aid
14. Red guide line at a distance of approximately 1.0 ft (0.3 m) from the ball head of the trailer hitch

System limits

The reversing camera will not function, or will only function to a limited extent in the following situations, for example:

- If there is heavy rain, snow or fog.
- If the light conditions are poor, e.g.at night.
- If the surroundings are illuminated with fluorescent lighting, the display may flicker.
- If there is a rapid change in temperature, e.g.if you drive out of the cold into a heated garage during the winter months.
- If the ambient temperature is very high.
- If the camera lens is obstructed, dirty, or fogged up. Observe the notes on cleaning the reversing camera (→ page 230).
- If the camera or rear of your vehicle is damaged. In this event, have the cameras, their positions and their setting checked at a qualified specialist workshop.

The field of vision and other functions of the reversing camera may be restricted due to additional vehicle attachments on the rear of the vehicle (e.g.a cargo liftgate).

ⓘ The display contrast may be impaired due to incidental sunlight or other light sources. Particular attention should be afforded in these conditions.

ⓘ Have the display repaired or replaced if its use is considerably restricted due to pixel errors, forexample.

ⓘ Objects not at ground level can appear further away than they actually are. This includes, forexample:

- the bumper of a vehicle parked behind
- the drawbar of a trailer
- the ball neck of a trailer hitch
- the tail-end of a truck
- slanted posts

Only use the guide lines of the camera image for orientation. Do not travel further than the lowest horizontal guide line when approaching objects. You may otherwise damage your vehicle and/or the object.

360° camera

Function of the 360° camera

The 360° camera is a system comprising four cameras which cover the immediate vehicle surroundings. The cameras provide support, forexample when parking or when exits are difficult to see.

The 360° camera includes the following cameras and evaluates their images:

- Reversing camera
- Front camera
- Two outside mirror cameras

The cameras serve solely as aids and may show a distorted view of obstacles, show them incorrectly or even omit them altogether. They are not a substitute for you having to pay attention to your surroundings. The responsibility for safe maneuvering and parking remains with the driver at all times. Ensure that there are no people, animals or objects etc. in the maneuvering area while maneuvering and parking.

The following camera perspectives are available in the media display:

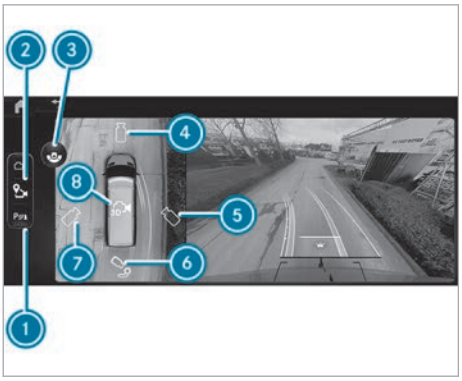

Overview of menu Camera Views

1. Activates/deactivates Parking Assist PARKTRONIC
2. Sets the GPS activation point (→ page 166)
3. Switches between standard view and wide-angle view
4. Image from the front camera
5. 3D view right-hand side of vehicle
6. Switches between trailer view (depending on the respective equipment) and the reversing camera
7. 3D view left-hand side of vehicle
8. 3D auto view

ⓘ The warning display of Parking Assist PARKTRONIC is shown in all views (→ page 158).

ⓘ Availability of the 3D auto view ⑧ and 3D view ⑤, ⑦ functions is dependent upon the respective equipment.

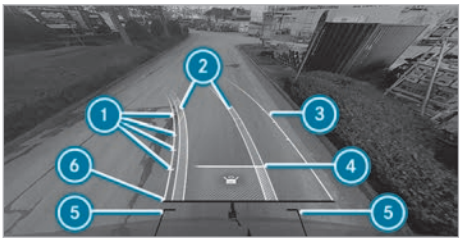

Function of the guide lines (example)

① Guide lines at a distance of approximately 3.3 ft (1.0 m), 4.9 ft (1.5 m), 6.6 ft (2.0 m) and 9.8 ft (3.0 m) from the rear area

② Path marking the course the wheels will take with the current steering angle (dynamic)

③ Driven surface depending on the current steering angle (dynamic)

④ Area required (shaded) with guide line to open the rear-end doors fully

⑤ Red guide lines at a distance of approximately 8 in (0.2 m) from the rear area, vehicle width including outside mirrors

⑥ Guide line at a distance of approximately 1.0 ft (0.3 m) from the rear area

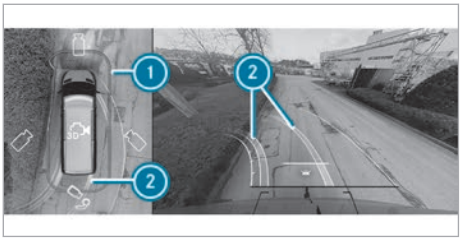

Image from the front camera or reversing camera (example)

① Warning display of Parking Assist PARKTRONIC (→ page 158)

② Path with the current steering angle

WARNING Risk of accidents due to objects not being displayed or being displayed in a distorted manner

Due to the projection of the cameras, objects in the 3D views may be strongly distorted or not displayed at all.

▶ Make sure that there are no persons, animals or objects etc., in the maneuvering area while maneuvering and parking.

3D view left/right-hand side of the vehicle (example)

① Top view with warning display of Parking Assist PARKTRONIC

② Side view of the outside mirror cameras

In the 3D view, left/right-hand side of the vehicle, the virtual camera moves to the respective side of the vehicle ②. When you change the transmission position, the view is automatically adapted. In addition, the top view ① is shown with the Parking Assist PARKTRONIC warning display.

ⓘ The area behind the vehicle is **not** displayed as a mirror image, as is usual in the 3D views.

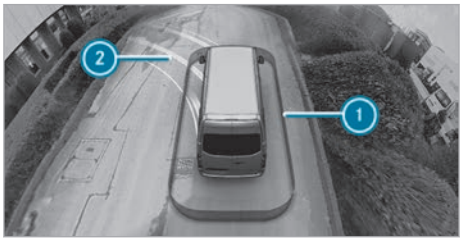

3D auto view (example)

① Warning display of Parking Assist PARKTRONIC (→ page 158)

② Guide lines

In the 3D auto view, the virtual camera moves to the standard perspective, facing forward from the rear above the roof.

If you touch the touchscreen, the view changes to a 3D view with free rotation. You can turn, tilt and zoom the perspective by touch.

Wide-angle view (example)

1. Activates/deactivates Parking Assist PARKTRONIC
2. Switches between standard view and wide-angle view
3. Warning display of Parking Assist PARKTRONIC (→ page 158)

If the top view with the reversing camera image is displayed, switch to the wide-angle view with the icon 2 indented to the left. When the wide-angle view is displayed, switch back to the respective top view.

If you select the trailer view and no trailer is coupled to the vehicle, the following display appears:

Trailer view (example)

1. Switches between standard view and trailer view
2. Red guide line at a distance of approximately 1.0 ft (0.3 m) from the ball head of the trailer hitch
3. Yellow guide line, locating aid
4. Ball head of the trailer hitch

ⓘ In trailer mode, the guide lines are shown at the level of the trailer hitch.

When the electrical connection is established between vehicle and trailer, the display changes to the side camera view.

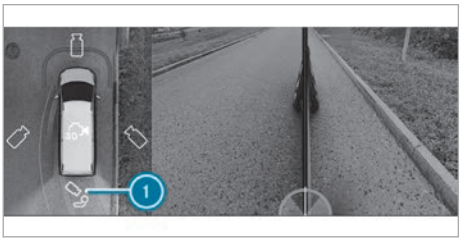

Side view of outside mirror cameras in the trailer view (example)

1. Switches between standard view and trailer view

System limits

If the system is not ready for operation, the System Inoperative message appears in the media display.

⚠ WARNING Risk of accident due to restrictions in the function of the 360° camera

If the function of the 360° camera is restricted, there is a risk of collision with people or objects.

- ▶ Do not use the 360° camera in the event of function restrictions.
- ▶ Make sure that there are no persons, animals or objects etc., in the maneuvering area while maneuvering and parking.

The 360° camera will not function, or will only partially function in the following situations, for example:

- When you are driving forwards at a speed greater than approx. 10 mph (16 km/h).
- The doors are open.
- An outside mirror is not completely extended.
- The weather conditions are poor, e.g.heavy rain, snow, fog, storm or spray.
- The light conditions are poor, e.g.,at night or if a light is shining into the camera.
- If the camera lens is obstructed, dirty, or fogged up. Refer to the notes on cleaning the 360° camera (→ page 230).
- If cameras or vehicle components in which the cameras are installed are damaged. In this case, have the cameras, their position and their setting checked at a qualified specialist workshop.

For technical reasons, the standard height of the vehicle may be altered if the vehicle is carrying a heavy load and this can result in inaccuracies in the guide lines and in the display of generated images.

The field of vision and other functions of the camera system can potentially be restricted due to additional vehicle attachments (e.g.license plate bracket or bicycle rack.

ⓘ The contrast of the display may be impaired by abrupt, direct sunlight or other light sources, e.g.when driving out of a garage. Particular attention should be afforded in these conditions.

ⓘ Have the display repaired or replaced if its use is considerably restricted due to pixel errors, forexample.

Observe also the information on vehicle sensors and cameras (→ page 146).

Calling up the 360° camera views using the button

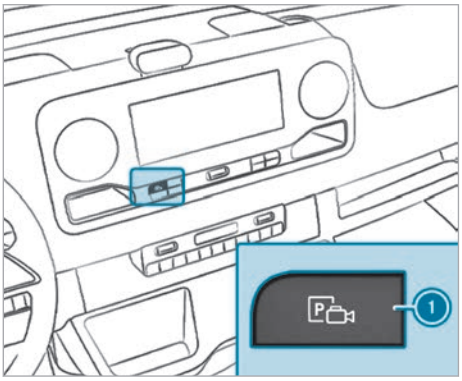

▶ Press the button ①.

▶ Select the desired view in the multimedia system (→ page 163).

Managing 360° camera with GPS-activation positions

Multimedia system:

→ [⌂] ▸▸ Settings ▸▸ Assistance ▸▸ Camera

Renaming an activation position

ⓘ You can determine activation positions in the Camera Views menu (→ page 163).

▶ Select [•••] for the desired activation position.

▶ Select Edit .

▶ Enter a name and confirm.
The activation position is stored under the new name.

Deleting an activation position

▶ Select [•••] for the desired activation position.

▶ Select Delete Entry.

▶ Confirm the prompt.
The activation position is deleted.

ATTENTION ASSIST

Function of ATTENTION ASSIST

ATTENTION ASSIST assists you on long, monotonous journeys, e.g. on highways and trunk roads. If signs of fatigue or increasing lapses in concentration on the part of the driver are detected, the system suggests taking a break.

ATTENTION ASSIST serves solely as an aid. It cannot always promptly detect fatigue or lapses in concentration. The system is not a substitute for a well-rested and attentive driver. On long journeys, take regular, timely breaks to allow for adequate recovery.

You can choose between two settings:

- **Standard:** normal system sensitivity.
- **Sensitive:** higher system sensitivity. The driver is warned at an earlier stage, and the attention level detected by the system is adapted accordingly.

If fatigue or increasing lapses in concentration are detected, the warning ATTENTION ASSIST: Take a Break! appears on the instrument cluster display.

You can acknowledge the message and take a break as necessary. If you do not take a break and ATTENTION ASSIST continues to detect increasing lapses in concentration, you will be warned again after a minimum of 15 minutes.

The following information is shown on the instrument cluster display:

- journey time since the last break
- the attention level determined by ATTENTION ASSIST

The more segments of the circle (1) displayed, the higher the detected attention level. Fewer segments (1) are displayed in the circle as the attention level decreases, with the color of the diminishing circle segments changing from green, to orange, to red accordingly.

If ATTENTION ASSIST cannot calculate attention levels, and consequently cannot issue a warning, the System Passive message appears.

If the display shows a warning, the multimedia system offers to search for a rest area. You can select a rest area and start navigation to this rest area. This function can be activated and deactivated in the multimedia system.

When you restart the vehicle, ATTENTION ASSIST is automatically switched on. The last selected sensitivity level remains stored.

You can call up the ATTENTION ASSIST display (Attention Level) in the Trip menu of the instrument cluster (→ page 188).

If the indicator lamp [OFF] on the instrument cluster display lights up, ATTENTION ASSIST is faulty.

System limits

ATTENTION ASSIST is active in the 37 mph (60 km/h) to 124 mph (200 km/h) speed range.

The functionality of ATTENTION ASSIST is restricted, and warnings may be delayed or not issued at all in the following situations in particular:

- If you have been driving for less than approximately 20 minutes.
- If the road condition is poor (uneven road surface or potholes).
- If there is a strong side wind.
- If you adopt a sporty driving style (high cornering speeds or high rates of acceleration).
- If the clock is set to the incorrect time.
- If you change lanes and vary your speed frequently in active driving situations.

Refer to the information regarding display messages that can be shown on the instrument cluster display.

The ATTENTION ASSIST drowsiness or attentiveness assessment is deleted and restarted when continuing the journey in the following situations:

- You switch off the vehicle.
- You unfasten your seat belt and open the driver's door (e.g. to change drivers or take a break).

Set ATTENTION ASSIST

Multimedia system:

→ [⌂] ▸▸ Settings ▸▸ Assistance ▸▸ Assistance ▸▸ ATTENTION ASSIST

▶ Activate or deactivate the function.

Setting options

▶ Select Standard, Sensitive or Off.

Suggesting a rest area

▶ Select Suggest Rest Area.

▶ Activate or deactivate the function.
If ATTENTION ASSIST detects fatigue or increasing lapses in concentration, the system suggests a nearby rest area.

Traffic Sign Assist

Function of Traffic Sign Assist

Traffic Sign Assist records the traffic sign with the multifunction camera and compares it with information from a digital street map in the multimedia system. It assists you by showing detected speed restrictions and no-overtaking zones on the instrument cluster display.

The system can issue a warning when you exceed the maximum permissible speed.

In some countries, the system can provide you with further functions and can warn you when you are approaching pedestrian crossings. If the system detects that you are driving onto a section of road in the wrong direction of travel, it triggers a warning.

The camera also detects and evaluates traffic signs with a restriction indicated by an additional sign (e.g.in wet conditions).

Traffic Sign Assist only portrays selected signs on the instrument cluster display. Actual traffic signs and speed restrictions always take priority over the traffic signs and speed restrictions shown on the display.

Notes on trailer operation

ⓘ Observe also the notes on trailer operation (→ page 179).

If a trailer or bicycle rack is connected correctly, the media display shows the query concerning the type of trailer and its respective maximum permissible speed .

It is the responsibility of the driver to manually adapt the maximum permissible speed in the respective small or large trailer –category –.

In particular, country-specific laws must be taken into account, e.g.on:

- maximum design speed or maximum permissible speed for which the vehicle is approved
- permissible gross mass with or without towing vehicle
- required number of years with a corresponding driving license
- type and condition of the road being traveled
- the weather conditions

The maximum permissible speed adapted to the vehicle/trailer combination can be adopted in the manual or automatic speed transfer during the journey (depending on the respective equipment).

On the system side, relevant additional signs for speed restrictions and clear road category traffic rules can be considered for the vehicle/trailer combination (depending on the respective country of use).

No maximum permissible speed can be selected for a bicycle rack in the multimedia system. When using a bicycle rack, observe the specifications for the maximum permissible speed in the instruction manual provided by the manufacturer.

The following information should also be observed:

- Select a speed adapted to the traffic, surroundings and weather conditions.
- Observe actual traffic signs.
- Observe applicable traffic rules and regulations.

Observe the information on driving systems and your responsibility, otherwise you may fail to recognize potential dangers (→ page 145).

Notifications on the instrument cluster display

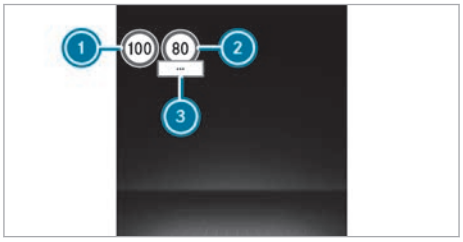

1. Permissible speed
2. Permissible speed when there is a restriction
3. Additional sign with a restriction

The system can show up to two traffic signs on the instrument cluster display simultaneously. The system always prioritizes displaying speed restrictions. If two speed signs are shown on the instrument cluster display, e.g.with detected restrictions, the value of the speed restriction on the left 1 is always relayed to the cruise control or to Active Distance Assist DISTRONIC.

Important information from other systems can cause traffic signs to be hidden for a short time.

Examples of traffic signs which can be displayed

Traffic Sign Assist can detect and display the following traffic signs ①:

- speed restrictions
- end of the speed restriction
- overtaking restrictions
- play streets

Traffic Sign Assist can detect the following additional signs ③ and evaluate relevance of the restrictions where necessary using auxiliary vehicle sensors:

- in wet conditions
- slippery road surfaces
- in fog
- temporary restrictions
- exits
- restrictions for vehicle/trailer combinations

Traffic Sign Assist also uses the data from a digital street map in the multimedia system. When you pass a town or city boundary or move from one road onto another, e.g.when joining or exiting a highway or when turning at a crossroads, this means that the view on the instrument cluster display can also be updated without a traffic sign having been detected.

ⓘ Update the digital street map of the multimedia system regularly to ensure optimum functionality of Traffic Sign Assist.

If Traffic Sign Assist cannot determine the current maximum permissible speed, e.g.due to absent signage, the following notification appears on the instrument cluster display:

Traffic Sign Assist is not available in all countries. This display is shown permanently in the vehicle when traveling in countries which do not support Traffic Sign Assist.

If Traffic Sign Assist is temporarily or permanently unavailable due to a technical fault or soiling of the windshield, a corresponding message appears on the instrument cluster display and the Traffic Sign Assist warning lamp lights up.

ⓘ Please also note the information pertaining to display messages for Traffic Sign Assist (→ page 298).

Warning when the maximum permissible speed is exceeded

The system can warn you if you are about to exceed the detected maximum permissible speed. Depending on the respective country of use, you can set how much the maximum permissible speed may be exceeded in the multimedia system before a warning is issued. You can select in the settings whether the warning should be issued visually, with the traffic sign flashing on the instrument cluster display, or as a combination of visual and audible warning. Selection of the warning type is confirmed by way of a notification on the instrument cluster display.

① Visual warning only
② Warning off

ⓘ The type, duration and deployment stages of the speed warning, as well as the option of setting the timing of the deployment stages upon which the warning is issued, are subject to legislation valid for the respective country in which the vehicle is delivered.

Additional functions of Traffic Sign Assist (country-specific)

Warning for no-entry signs: Traffic Sign Assist can warn you if you drive in the wrong direction of travel down a section of road, forexample, on highway slip roads or one-way streets.

Warning at pedestrian crossings: when you approach pedestrian crossings and pedestrians are in the danger zone or are moving towards it, Traffic Sign Assist can warn you up to a travel speed of approximately 44 mph (70 km/h).

System limits

The system may be impaired or inoperative in the following situations in particular:

- If visibility is poor, e.g.due to insufficient illumination of the road, highly variable shade condi-

tions, rain, snow, fog, swirling dust or heavy spray.

- If there is glare, e.g.from oncoming traffic, direct sunlight or reflections.
- If there is dirt on the windshield in the vicinity of the multifunction camera or if the camera is fogged up, damaged, or covered.
- If the traffic signs are difficult to see because, forexample, they are dirty, obscured, faded, iced over, damaged, inconveniently positioned, insufficiently illuminated or askew.
- Active traffic signs with LED displays may not be detected correctly, or even at all due to technical factors, suchas transmission frequency.
- If the information in the digital street map of the multimedia system is inaccurate or incomplete, or has not been updated.
- If the signage, road markings or road layout are ambiguous, e.g.traffic signs at road works, at exits and slip roads, adjacent lanes or parallel roads, and pedestrian crossing markings at traffic lights.
- If the signage or road markings do not comply with the standard.
- If the signage, road markings or road guidance are country-specific and deviate from the navigation system's route guidance, e.g.at or after road works.
- After sharp turns and in tight bends, when traffic signs are outside the camera's field of vision.
- If you overtake vehicles with traffic signs which are affixed or attached to them.
- If you use transport equipment secured to the vehicle with a trailer coupling, suchas a bicycle rack, restrictions for vehicle/trailer combinations may be deemed applicable.
- If special restrictions as a vehicle/trailer combination apply for certain approval types, which the system cannot determine or recognize.
- In country-specific vehicle classes for which requirements for the maximum permissible speed have been modified.

Setting Traffic Sign Assist

Multimedia system:

→ ⌂ ▸▸ Settings ▸▸ Assistance ▸▸ Assistance ▸▸ Traffic Sign Assist

Activating or deactivating the speed warning

ⓘ The speed warning is switched on by default (depending on the respective country of use).

▶ Switch off Speed Limit Warning.
Following country-specific legislation, the speed warning remains deactivated until the next time the vehicle is switched on or off.

ⓘ The audible speed warning can also be switched on and off via quick-access by pressing and holding the mute button on the steering wheel, by pressing the speed icon in the status line of the media display or via voice command (availability of these functions is country-dependent).

Changing the type of speed warning

▶ Change the warning to Visual or Visual & Audible.

Setting the warning threshold

This value determines the speed at which a warning is issued when exceeded.

▶ Set the desired speed under Warning Threshold.

ⓘ Availability of the function is subject to country-specific legislation.

Switching the acoustic signal for a new maximum permissible speed on or off

ⓘ The acoustic signal for a new maximum permissible speed is switched off at the factory.

The function determines whether a subtle, non-intrusive sound supports each change of the displayed speed in the instrument cluster.

▶ Activate or deactivate the function.

ⓘ Availability of the function is dependent on the respective country of use.

Maneuvering assistant

Drive Away Assist function

ⓘ Drive Away Assist is available only for vehicles with automatic transmission.

ⓘ In the variant without rear sensors, Drive Away Assist works only in the forward direction of travel (→ page 158).

Drive Away Assist can reduce the severity of a collision when pulling away. If an obstacle is detected in the direction of travel, the vehicle's speed is briefly reduced to approximately 1 mph (2 km/h). The symbol [ ] appears in the media display if a critical situation is detected.

WARNING Risk of accident caused by limited detection performance of Drive Away Assist

Drive Away Assist cannot always clearly identify objects and traffic situations.

- Always pay careful attention to the traffic situation; do not rely on Drive Away Assist alone.
- Be prepared to brake or swerve as necessary, provided the traffic situation permits and that it is safe to take evasive action.

Drive Away Assist serves solely as an aid. It is not a substitute for you having to pay attention to your surroundings. The responsibility for safe maneuvering, parking and exiting parking spaces remains with you. Ensure that no persons, animals, objects, etc. are in the vehicle path.

A risk of collision may arise in the following situations, for example:

- Accelerator pedal or brake pedal is inadvertently actuated in place of the other.
- If an incorrect transmission position is engaged.

The Drive Away Assist function is active under the following conditions:

- Parking Assist PARKTRONIC is activated (→ page 160).
- Each time the transmission position is changed to [R] or [D] with the vehicle at a standstill
- If the detected obstacle is less than approximately 3.3 ft (1.0 m) away.
- The maneuvering assistant function is activated (→ page 172).

System limits

Drive Away Assist is not available on uphill gradients and when driving with a trailer.

In the variant without rear sensors, Drive Away Assist works only in the forward direction of travel.

If a transport device, e.g. trailer or bicycle rack, is attached to the trailer hitch and the electrical connection is correctly established, Drive Away Assist is not available.

ⓘ Observe also the system limits of Parking Assist PARKTRONIC (→ page 158).

Function of close-range braking

Close-range braking can prevent collisions with pedestrians when the vehicle is reversing at slow speeds. If the reversing camera detects a person in the vehicle's path, the vehicle can be braked to a standstill.

Close-range braking can intervene under the following conditions:

- The vehicle is reversing at a speed slower than 6 mph (10 km/h).
- The camera image is shown in the media display.

When close-range braking is triggered, the [ ] symbol appears in red in the selected view in the Camera & Parking menu.

ⓘ If close-range braking is not available, the [ ] symbol appears in gray.

Close-range braking serves solely as an aid. It is not a substitute for you having to pay attention to your surroundings. The responsibility for safe maneuvering, parking and exiting parking spaces remains with you. Ensure that no persons, animals, objects, etc. are in the vehicle path.

WARNING Risk of accident caused by limited detection by the maneuvering brake function

The maneuvering brake function cannot always clearly detect people. Other obstacles are not detected by the function.

In these cases, the function may brake unnecessarily or not brake at all.

- Always pay careful attention to the traffic situation; do not rely on the maneuvering brake function alone.
- Be ready to brake.

System limits

Observe the system limits of the following functions:

- Parking Assist PARKTRONIC (→ page 158)
- 360° camera (→ page 163)
- Reversing camera (→ page 160)

The close-range braking function is not available in the following situations:

- on uphill gradients
- if transport equipment, forexample a trailer or bicycle rack, is attached to the trailer hitch and the electrical connection has been correctly established.

Rear Cross Traffic Alert

Function of Rear Cross Traffic Alert

ⓘ The Rear Cross Traffic Alert function is only available for closed vehicles, e.g.panel van with Blind Spot Assist.

The Rear Cross Traffic Alert function can warn drivers of any crossing traffic when reversing out of a parking space and maneuvering. The radar sensors in the bumper also monitor the area adjacent to the vehicle. If a vehicle is detected, the warning lamp in the outside mirror on the corresponding side lights up red. If a critical situation is detected, a warning tone also sounds.

Vehicles with Parking Assist PARKTRONIC: If a critical situation is detected, the symbol also appears in the media display and the vehicle can be braked automatically. In this case, a warning tone sounds.

Detection will not be possible if the radar sensors are obscured by vehicles or other objects.

The Rear Cross Traffic Alert function is active under the following conditions:

- Blind Spot Assist is activated (→ page 173).
- Vehicles with Parking Assist PARKTRONIC: The rear cross traffic warning is activated (→ page 172).
- If the vehicle is reversing at walking pace.

ⓘ Observe also the instructions on Blind Spot Assist (→ page 172).

System limits

The Rear Cross Traffic Alert function is not available on uphill gradients.

If a transport device, e.g.trailer or bicycle rack, is attached to the trailer hitch and the electrical connection is correctly established, the Rear Cross Traffic Alert function is not available.

Setting Rear Cross Traffic Alert

Multimedia system:

→ Settings ▸▸ Assistance ▸▸ Parking

▶ Select Maneuvering Assistance.

▶ Activate or deactivate the desired maneuvering assistant.

Blind Spot Assist

Function of Blind Spot Assist

Blind Spot Assist uses two lateral, rear passenger compartment-facing radar sensors to monitor the area up to 130 ft (40 m) behind and 10 ft (3 m) next to your vehicle.

If a vehicle is detected above speeds of approximately 8 mph (12 km/h) and this vehicle subsequently enters the monitored range directly next to your vehicle, the warning lamp in the outside mirror lights up red.

Status indicator on the instrument cluster display

Gray: the system is activated but inoperative.

Green: the system is activated and operational.

If a vehicle is detected close to your vehicle and you switch on the turn signal indicator in the corresponding direction, a double warning tone sounds and the red warning lamp in the outside mirror flashes. If the turn signal indicator remains switched on, the double warning tone sounds once for every detected vehicle.

If you overtake a vehicle briskly, no warning is given.

⚠ **WARNING** Risk of accident despite Blind Spot Assist

Blind Spot Assist does not react to either stationary objects or vehicles approaching and overtaking you at a greatly different speed.

Blind Spot Assist cannot warn drivers in these situations.

▶ Always pay careful attention to the traffic situation and maintain a safe distance at the side of the vehicle.

Observe the information on driving systems and be aware of your personal responsibility, otherwise you may fail to recognize potential dangers (→ page 145).

Exit warning

The exit warning is an additional function of Blind Spot Assist and can warn vehicle occupants of any approaching vehicles when leaving the stopped vehicle.

⚠ **WARNING** Risk of accident despite exit warning

The exit warning neither reacts to stationary objects nor to persons or road users approaching you at a greatly differing speed.

The exit warning cannot warn drivers in these situations.

▶ Always pay particular attention to the traffic situation when opening the doors and make sure there is sufficient clearance.

If a vehicle is detected in the monitored range, the warning lamp in the outside mirror lights up. If a vehicle occupant opens the front door on the side subject to a warning, a warning tone sounds and the warning lamp in the outside mirror starts to flash. An exit warning is not issued for the sliding doors.

This additional function is only available when Blind Spot Assist is switched on. The exit warning can warn you from switching on up to a maximum of three minutes after switching off the vehicle. The end of the availability of the exit warning function is indicated by three flashes of the warning lamp in the outside mirror.

The exit warning is only an aid and is no substitute for the attentiveness of the vehicle occupants. Responsibility always lies with the vehicle occupants when opening doors and leaving the vehicle.

System limits

Blind Spot Assist may in particular be limited in the following situations:

- if the sensors are soiled or obscured
- if there is poor visibility, e.g. owing to fog, heavy rain, snow or spray
- if narrow vehicles are within the monitored range, e.g. bicycles
- if the road has very wide or very narrow lanes
- if vehicles are not driving in the middle of their lane

Observe also the information on vehicle sensors and cameras (→ page 146).

Warnings may be issued in error when driving close to crash barriers or similar solid lane borders. Always ensure that there is a sufficient distance at the side to other road users or obstacles.

Warnings may be interrupted when driving alongside long vehicles for an extended time, e.g. trucks.

Blind Spot Assist is not operational when reverse gear is engaged.

If transport equipment, e.g. a trailer or bicycle rack, is attached to the trailer hitch and the electrical connection has been correctly established, Blind Spot Assist and the exit warning are only available to a limited extent.

The exit warning function may be limited in the following situations:

- when the sensor is blocked by adjacent vehicles in narrow parking spaces
- when people are approaching
- in the case of stationary or slow-moving objects

Activating/deactivating Blind Spot Assist

Multimedia system:

→ [⌂] ▸▸ Settings ▸▸ Assistance ▸▸ Collision Avoidance

▶ Activating/deactivating Blind Spot Assist.

Sideguard Assist

Function of Sideguard Assist

When turning off or changing lanes, Sideguard Assist can issue a warning if there is a risk of collision with moving objects in the monitored area on the front passenger side.

Sideguard Assist is always active after starting the vehicle. Deactivation of the acoustic warning signal of Sideguard Assist (→ page 174) can only be undertaken manually. The acoustic warning signal becomes active again when you restart the vehicle.

⚠ **WARNING** Risk of accident due to limitations of Sideguard Assist in the detection of objects and traffic conditions

Sideguard Assist cannot always clearly identify objects and complex traffic situations. In such cases, Sideguard Assist may:

- issue an unnecessary warning
- not issue a warning

▶ Drive on carefully and be ready to brake, particularly if the system issues a warning.

▶ Always pay close attention to the traffic situation and maintain a safe distance at the side of the vehicle.

ⓘ Sideguard Assist warns you of objects moving at up to 25 mph (40 km/h) in the monitored area on the front passenger side.

ⓘ Sideguard Assist issues a warning for your own vehicle at speeds up to a maximum of 18 mph (30 km/h).

ⓘ No warnings are issued for moving pedestrians or objects within the monitored area.

ⓘ Sideguard Assist is not a parking assistance system.

Monitored side area

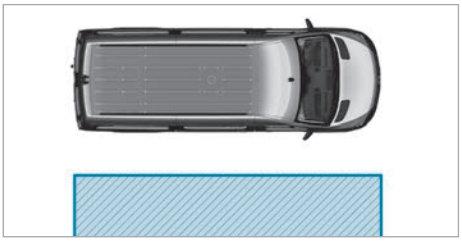

- The warning area extends along the entire vehicle length.
- The width of the warning area is approx. 3.5 m (12 ft)

System limits

There may be unwarranted system responses when driving a left-hand drive vehicle in left-hand traffic or a right-hand drive vehicle in right-hand traffic. Switch off the acoustic warning signal of Sideguard Assist.

Sideguard Assist may be impaired or inoperative in the following situations in particular.

System-related:
- Sideguard Assist is not active while backing up.
- When driving with a trailer, the function is only available to a limited extent.
- Due to the system characteristics, warnings may be interrupted when you are driving alongside particularly long vehicles, forexample trucks, for a prolonged time.

Situation-related:
- Objects are concealing pedestrians or cyclists.
- Pedestrians or cyclists suddenly change their direction or speed.
- Persons or vehicles move rapidly into the detection range of the sensors.
- Objects are moving at the same speed as your own vehicle.
- Multi-lane-change from the overtaking lane.
- Soiling, ice, snow, stickers, decals or detachable parts are obscuring the sensors.

ⓘ Sensors must not be painted over.

Environment-related:
- Very wide lanes
- Very narrow and winding lanes
- Sensor interference, e.g. caused by severe, unfavorable radar reflection from guardrails or other infrastructure

In the following cases in particular, have the function of the radar sensors checked at a qualified specialist workshop:
- After a severe impact
- After damage to the side trim

Switching warning tones from Sideguard Assist on or off

Multimedia system:

→ ⌂ ▸▸ Settings ▸▸ Assistance ▸▸ Collision Avoidance

▶ Switch the warning tones on or off.

Sideguard Assist is always active. The function cannot be manually deactivated. The active function is not shown in the instrument cluster display.

Display in the instrument cluster:

- Warning tone was deactivated manually.

  If there is a risk of collision, only the red triangle in the outside mirror is shown.
- System is temporarily or permanently switched off owing to a system malfunction e.g. soiled sensors.

  In addition, the Sideguard Assist Inoperative display message may appear.

  Further information on system limits: (→ page 174).

Warning from Sideguard Assist

Object detected within the monitoring range

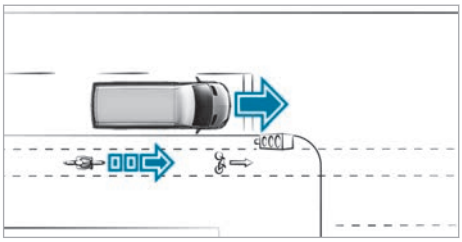

Example: left-hand drive vehicle

A moving object is detected within the monitored area:

- The red ▲ warning symbol lights up in the right outside mirror.

Detected risk of collision

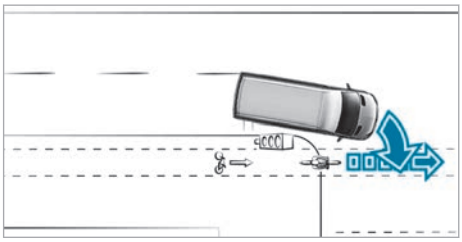

Example: left-hand drive vehicle

A risk of collision is detected when the turn signal indicator is switched on:

- The red warning symbol ▲ flashes in the right outside mirror.
- A warning tone sounds.

For the following reasons, a warning may not be issued despite a risk of collision on the front passenger side:

- Sideguard Assist has failed or a malfunction has occurred.
- The acoustic warning signal of Sideguard Assist has been deactivated manually.

  If there is a risk of collision, the red warning symbol ▲ continues to be shown in the outside mirror.

Moving-off Information Assist

Function of Moving-off information Assist

The function monitors a certain area ① and issues a warning to the driver if cyclists or pedestrians, forexample, are detected within this area. This area is generated and defined according to the steering angle of the vehicle.

Monitored area

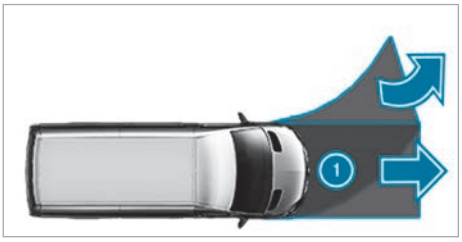

Monitored area (example)

Moving-off information Assist may be impaired or inoperable in the following situations in particular:

System-dependent:

- Moving-off information Assist is not active while reversing.

Situation-dependent:

- Objects are obscuring pedestrians or cyclists.
- Pedestrians or cyclists suddenly change their direction or speed.
- Persons or vehicles move rapidly into the detection range of the sensors.
- Objects are moving at the same speed as your own vehicle.

  Soiling, ice, snow, stickers, decals or detachable parts are obscuring the sensors.

ⓘ Sensors must not be painted over.

Environment-related:

- If the sensors are impaired e.g. by severe or unfavorable radar reflection from guardrails or other infrastructure

In the following cases in particular, have the function of the sensors checked at a qualified specialist workshop:

- After a severe impact
- After damage to the side trim

Activating/deactivating Moving-off information Assist

Multimedia system:

→ [⌂] ▸▸ Settings ▸▸ Assistance

▶ Activate or deactivate the function.

ⓘ Moving-off information Assist is always active. Manual deactivation of the function can only be performed for the current vehicle start.

If the warning lamp [OFF] is lit, Moving-off information Assist is deactivated.

The Moving-off Information Assist Inoperative message may also appear.

Warning by Moving-off information Assist

Moving object is detected in the monitored area:

- The yellow warning symbol [⚠] lights up in the instrument cluster.

Sensor is dirty:

- The yellow warning symbol [OFF] lights up in the instrument cluster.

Risk of collision is detected:

- The red warning symbol [⚠] lights up in the instrument cluster.
- An audible warning is issued.

For the following reasons, a warning may not be given despite a risk of collision:

- Moving-off information Assist has failed or a malfunction has occurred.

Active Lane Keeping Assist

Function of Active Lane Keeping Assist

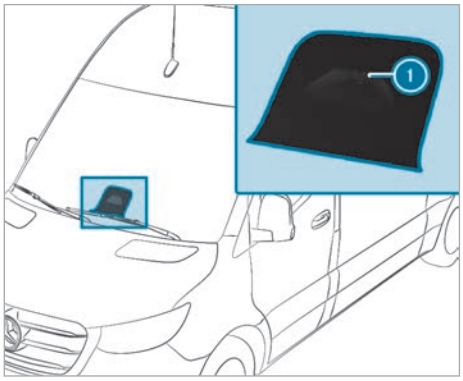

Active Lane Keeping Assist monitors the area ahead of your vehicle with the multifunction camera ① and can protect you from unintentionally leaving your lane. The system can guide you back into your lane with course-correcting steering interventions, and also warn you with tangible steering wheel feedback.

Active Lane Keeping Assist is available at speeds above approximately 37 mph (60 km/h).

The system can intervene under the following conditions:

- Active Lane Keeping Assist detects a lane marking.
- A front wheel of your vehicle moves onto this lane marking.

If you activate the turn signal indicator, no steering intervention takes place on the relevant side.

If you leave your lane without activating the turn signal indicator, but the risk of collision with a moving obstacle in your own lane is detected, there is no steering intervention.

Vehicles with Blind Spot Assist: if the system detects an obstacle, e.g. another vehicle in the adjacent lane, steering intervention takes place despite the turn signal indicators.

Depending on the country, Active Lane Keeping Assist can already react in the following situations from a speed of approximately 28 mph (45 km/h):

- If your own vehicle is overtaken by another road user and a risk of collision is detected, there is course-correcting steering intervention.
- If you drive over a detected lane marking, the system will issue a warning via haptic feedback through the steering wheel.

In the following cases symbol ① appears in the instrument cluster display and a warning tone sounds:

- A steering intervention by Active Lane Keeping Assist lasts longer than approx. ten seconds.
- There are two or more steering interventions by the system within approx. three minutes without steering intervention by the driver.

You can set the sensitivity of the system in the settings of Active Lane Keeping Assist to determine the level of support required. You can also determine whether the system is to react to interrupted or only to solid lane markings (→ page 178).

Active Lane Keeping Assist status displays

White: Active Lane Keeping Assist is switched off.

If ESP® is switched off or a tire pressure loss warning appears, Active Lane Keeping Assist will automatically be switched off.

Yellow: there is a malfunction. Also observe any messages on the display.

Gray: Active Lane Keeping Assist is switched on but not ready.

Green: Active Lane Keeping Assist is switched on and ready. If the system is only available on one side, only the lane marking on that side is shown in green.

Red: Active Lane Keeping Assist has guided you back into your lane with a course-correcting steering intervention. The status display flashes if there is also a tangible warning at the steering wheel. Only the lane marking on the side for which the warning was issued is shown in red.

Display of Active Lane Keeping Assist in the **Assistance** menu

If a front wheel moves onto a detected lane marking, this is highlighted in red on the instrument cluster display in the Assistance menu.

System limits

In the following situations, there may be no course-correcting steering intervention, but possibly a tangible warning in the steering wheel:

- if you actively steer, brake or accelerate
- if a driving safety system intervenes, such as ESP®, Active Brake Assist or Blind Spot Assist
- if you have adopted a sporty driving style with high cornering speeds or high rates of acceleration
- if transport equipment, e.g. a trailer or bicycle rack, is attached to the trailer hitch and the electrical connection has been correctly established

The system may be impaired or inoperative in the following situations in particular:

- if there is poor visibility, e.g. due to insufficient illumination of the road, highly variable light/shadow conditions, rain, snow, fog or heavy spray
- if there is glare, e.g. from oncoming traffic, direct sunlight or from reflections
- If there is dirt on the windshield in the vicinity of the multifunction camera or if the camera is fogged up, damaged or obscured
- if the bumper is soiled in the area of the radar sensors, or if these are damaged or covered
- if there are no lane markings, or several unclear lane markings are present for one lane, e.g. around roadwork
- if the lane markings are worn away, dark or covered
- if the distance to the vehicle in front is too short and the lane markings cannot be detected
- if the lane markings change quickly, e.g. lanes branch off, cross one another or merge
- if the lanes are very narrow and winding

Observe the notes on driving systems and your responsibility. You may otherwise fail to recognize potential dangers.(→ page 145)

Activating/deactivating Active Lane Keeping Assist

Multimedia system:

→ ⌂ ▸▸ Settings ▸▸ Assistance

▶ Select Collision Avoidance.

▶ Activate or deactivate the function.

Setting Active Lane Keeping Assist

Multimedia system:

→ [⌂] ▸▸ Settings
▸▸ Assistance ▸▸ Collision Avoidance
▸▸ Active Lane Keeping Assist

Setting sensitivity

▶ Select [⚙].
▶ Select Early, Med. or Late.

The most recently selected setting will be adopted the next time the vehicle is started.

ⓘ The standard setting for this function depends on the respective country of use.

Activating or deactivating assistance with broken lane markings

▶ Select Advanced Support.

The most recently selected setting will be adopted the next time the vehicle is started.

ⓘ The standard setting for this function depends on the respective country of use.

Work mode

ADR (working speed control)

Function of ADR (working speed control)

When activated, ADR automatically increases the engine speed to a preset speed or a speed that you can set.

ⓘ After a cold start, the idle speed of the engine is increased automatically. If the preset working speed is lower than the increased idle speed, the working speed is reached only once the engine has completed the warm-up phase.
ADR can be activated only when the vehicle is stationary and the parking brake is applied.
In vehicles with automatic transmission, the selector lever must be in position [P].

Activating/deactivating ADR

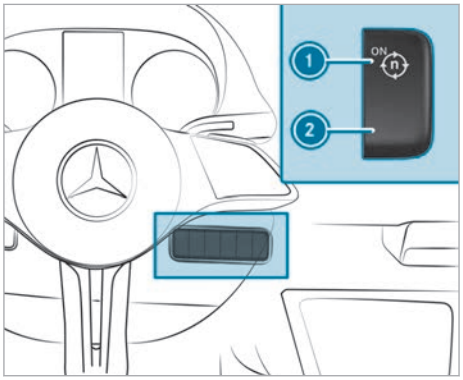

▶ **To activate:** press switch ① while the vehicle is running.
The message Working Speed Control Active appears in the instrument cluster.
▶ **To deactivate:** press switch ② while the vehicle is running.

The ADR will deactivate automatically in the following situations:

- You release the parking brake.
- You depress the brake pedal.
- The vehicle moves.
- The control unit detects a malfunction.

Adjusting ADR

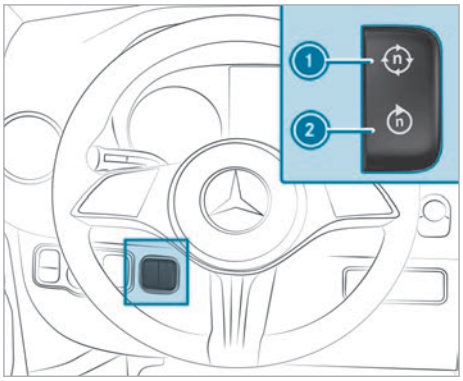

▶ Engage power take-off or activate ADR.
▶ **To increase:** press switch ①.
▶ **To reduce:** press switch ②.

Trailer operation

Notes on trailer operation

WARNING Risk of accident and injury if the tongue weight is exceeded

The carrier system may detach from the vehicle, thereby endangering other road users.

- Always comply with the permissible tongue weight when using a carrier.

WARNING Risk of accident due to unsuitable ball neck

If you install an unsuitable ball neck, the trailer hitch and the rear axle may be overloaded.

This can significantly impair the driving characteristics and the trailer may become loose. There is a risk of fatal injury.

- Only install a ball neck that complies with the permissible dimensions and is designed for the requirements of trailer operation.
- Do not modify the ball neck or the trailer hitch.

You can find specifications regarding the ball neck on the trailer's identification plate. You can find specifications regarding the trailer on the towing vehicle's identification plate and in the Technical Data (→ page 292).

WARNING Risk of accident and injury due to incorrectly installed ball neck

If the ball neck is not properly mounted and secured, it may come loose along with the trailer while the vehicle is in motion and endanger other road users. There is a risk of fatal injuries.

- Mount and secure the ball neck as described in the installation instructions of the ball neck manufacturer.
- With the ball neck mounted, always make sure it is properly secured before commencing a journey.

WARNING Risk of accident due to a ball neck that is not correctly installed or secured

If the ball neck is not correctly installed and secured, the trailer may come loose.

- Install and secure the ball neck as described in the ball neck manufacturer's installation instructions.
- If a ball neck is installed, ensure sure that it is properly secured before every journey.

NOTE Wearing out the brake linings by continuously depressing the brake pedal

- Do not depress the brake pedal continuously whilst driving.
- To use the braking effect of the engine, shift to a lower gear in good time.

NOTE The operating permit may be invalidated due to the illegal installation of trailer hitches

The installation – including retrofitting – of a non-folding or non-removable trailer hitch that even partially conceals the license plate or the lighting system is prohibited.

- Observe the applicable legal regulations for the installation of trailer hitches.

Be sure to comply with the operating instructions of the manufacturer of the trailer coupling and the ball neck.

Place your vehicle/trailer combination on surfaces that are as even as possible and secure it against rolling away (→ page 140). Couple and uncouple the trailer carefully.

When backing up the towing vehicle, ensure that there is no one between the vehicle and the trailer.

If you do not couple the trailer to the towing vehicle correctly, the trailer may become detached. Once it has been coupled and is roadworthy, the trailer must be in a horizontal position behind the towing vehicle.

Note the following regarding the tongue weight:

- Make full use of the maximum tongue weight, where possible.
- Never allow the tongue weight to fall below a legally prescribed minimum; the tongue weight must always be positive.
- Do not exceed or fall below the permissible tongue weights – this must be observed during loading and unloading of the trailer.

Do not exceed the following values:

- Permitted braked or unbraked trailer load

The maximum permissible trailer load for unbraked trailers is 1653 lbs (750 kg).

- Permissible rear axle load of the towing vehicle
- Gross vehicle weight rating of the towing vehicle
- Gross vehicle weight rating of the trailer
- Permissible gross combination weight
- Maximum permissible speed of the trailer

The relevant permitted values, which must not be exceeded, can be found in the following places:

- in your vehicle documents
- on the identification plate of the trailer hitch
- on the trailer identification plate
- on the vehicle identification plate

If there are discrepancies between the values, the lowest one shall apply.

Before driving off, ensure the following:

- The tire pressure on the rear axle of the towing vehicle has been set for the maximum load.
- The headlamps have been set correctly.

Tire pressure approved by the manufacturer can be found on the identification plates and, for the towing vehicle, in the tire pressure table overview (→ page 253).

Your vehicle will behave differently with a trailer relative to without a trailer:

- The vehicle/trailer combination will be heavier.
- The vehicle/trailer combination will be restricted in its acceleration and gradeability.
- The vehicle/trailer combination will have an increased braking distance.
- The vehicle/trailer combination will be more susceptible to crosswind gusts.
- The vehicle/trailer combination will require more sensitive steering.
- The vehicle/trailer combination will have a larger turning circle.

This may impair the vehicle's driving characteristics.

When driving with a vehicle/trailer combination, always adapt your speed to the current road and weather conditions. Drive carefully. Keep a sufficient safe distance.

Comply with the maximum permissible speed of 50 mph (80 km/h) or 62 mph (100 km/h), even in countries in which higher speeds are permitted for vehicle/trailer combinations.

Attach only an approved trailer hitch to your vehicle. Use only a ball neck that has been approved for your vehicle. Further information about availability and installation – including that of the trailer electrics – is available from a qualified specialist workshop.

The trailer hitch is one of the most important vehicle parts for road safety. Comply with the instructions on operation, maintenance and servicing in the manufacturer's operating instructions.

ⓘ Your vehicle's bumpers are not suitable for installing detachable trailer hitches.

Do not attach any rented trailer hitches or any other detachable trailer hitches to the bumpers.

ⓘ During trailer operation, remember that PARKTRONIC is available only to a limited extent, if at all.

ⓘ The height of the ball neck will change depending on the vehicle's load. In this case, use a trailer with a height-adjustable drawbar.

Driving notes

The maximum permissible speed for vehicle/trailer combinations depends on the type of trailer. Before setting off, consult the trailer's vehicle documents to find out the maximum permissible speed.

Your vehicle will behave differently with a trailer relative to without a trailer and will consume more fuel.

On long and steep downhill gradients, you must select shift range **3**, **2** or **1** in good time.

ⓘ This also applies if cruise control is switched on.

You will therefore make use of the engine's braking effect and will not have to brake as often to control the speed. This will take some of the strain off the brake system and prevent the brakes from overheating and wearing too quickly. If you need additional braking, depress the brake pedal intermittently rather than continuously.

Observe the notes on ESP® trailer stabilization (→ page 149).

Driving tips

If the trailer starts to sway, remember the following points:

- Do not accelerate under any circumstances.
- Do not countersteer.
- If necessary, apply the brakes.

ⓘ You can reduce the risk of the trailer swaying and rocking by retrofitting stabilizer bars or trailer stability programs. You can obtain further information from any authorized Mercedes-Benz Center.

When you are driving with a trailer, observe the following points:

- Maintain a greater distance from the vehicle in front than when driving without a trailer.
- Avoid braking abruptly. If possible, brake gently first of all so that the trailer closes up behind your vehicle. Then, increase the braking force rapidly.
- The values given for start-off gradeability refer to sea level. When driving in the mountains, note that engine output – and thus start-off gradeability – will decrease with increasing altitude.

Coupling/uncoupling a trailer

Coupling a trailer

NOTE Damage to the starter battery due to full discharge

Charging the trailer battery using the power supply of the trailer can damage the starter battery.

▶ Do not use the vehicle's power supply to charge the trailer battery.

▶ Shift the selector lever to position P.

▶ Apply the vehicle's parking brake.

▶ Close all the doors.

▶ Position the trailer on a level surface behind the vehicle.

ⓘ The height of the ball neck will change depending on the vehicle's load. In this case, use a trailer with a height-adjustable drawbar.

▶ Couple up the trailer.

▶ Establish all electrical and other connections to the trailer.

▶ Remove objects or devices that are preventing the trailer from rolling (e.g. chocks).

▶ Release the trailer's parking brake.

ⓘ The vehicle sub-harness has a cable connection to the brake light indicator lamp.

Observe the maximum permissible trailer dimensions (width and length).

Most US states and all Canadian provinces prescribe the following points, and you are urgently recommended to comply with these:

- Safety chains between the towing vehicle and the trailer. The chains should be routed in a criss-cross pattern under the drawbar. They must be connected to the trailer hitch and not to the bumper or to the vehicle's axle.

  Leave sufficient slack in the chains. This also allows for sharp cornering.
- A separate brake system is required for certain trailers.
- A safety feature is required for braked trailers. Determine the specific requirements according to the relevant laws.

  If the trailer becomes detached from the towing vehicle, the safety feature triggers the trailer brakes and can thus reduce the danger.

Uncoupling a trailer

⚠ **WARNING** Risk of being crushed and becoming trapped when uncoupling a trailer

When uncoupling a trailer with an engaged inertia-activated brake, your hand may become trapped between the vehicle and the trailer drawbar.

▶ Do not uncouple trailers with an engaged overrun brake.

NOTE Damage during uncoupling with an engaged overrun brake

The vehicle may be damaged if you uncouple with an engaged overrun brake.

▶ Do not uncouple trailers with an engaged overrun brake.

▶ Shift the selector lever to position P.

▶ Apply the vehicle's parking brake.

▶ Close all the doors.

▶ Apply the trailer's parking brake.

- Further secure the trailer against rolling away with a wheel chock or similar object.
- Remove the trailer cables and safety chains.
- Uncouple the trailer.

Information about towing a trailer

Operating a trailer is subject to many statutory regulations such as speed restrictions.

Many states also require an auxiliary separate functional braking system when towing a weight that exceeds a certain limit. For your safety, it is recommended to use a separate functional braking system on any towed vehicle.

Make sure that your trailer combination meets local regulations. This not only applies to your place of residence, but also to your destination. Information on this can be obtained from the police and local authorities.

Comply with the following when driving with a trailer:

- Practice cornering, stopping and backing up in a traffic-free location. In this way, you will gain driving experience and become accustomed to the new handling characteristics.
- Before driving, check the following:
  - that the trailer tow hitch and ball coupling are secure
  - that the safety switch for braked trailers is functioning correctly
  - that the safety chains are secure and undamaged
  - that the electrical connections are secure
  - that the lights are functioning correctly
  - the wheels for damage and correct tire pressure (→ page 250)
- Adjust the outside mirrors so that you have a clear view of the rear section of the trailer.
- If the trailer is equipped with an individual braking system, check before each journey whether the brakes are functioning correctly.
- If the trailer has electronically controlled brakes, pull away carefully with the vehicle/trailer combination. Brake manually using the brake controller and check whether the brakes are functioning correctly.
- Secure the load on the trailer in line with the requirements and rules for load-securing methods.
- When driving with a trailer, check at regular intervals that the load is secure and that the lights and brakes are functioning correctly.
- Bear in mind that the handling characteristics are more unstable when towing a trailer than when driving without a trailer. Avoid sudden steering movements.
- The vehicle/trailer combination is heavier, accelerates more slowly, has a reduced climbing ability and an increased braking distance. It is more susceptible to side winds and requires careful steering.
- If possible, do not brake suddenly, but rather moderately at first so that the trailer can activate its brakes. Then increase the pressure on the brake pedal.
- If the automatic transmission shifts between gears on uphill or downhill gradients, restrict the shift range. Select shift range 4, 3, 2 or 1.

  A lower gear and reduced speed decrease the risk of engine damage.
- When driving on a downhill gradient, shift to a lower gear to use the engine's braking effect.

  Avoid constant braking, as this could cause the vehicle brakes and possibly also the trailer brakes to overheat.
- If the coolant temperature increases significantly when the air-conditioning system is switched on, switch the air-conditioning system off.

  Coolant heat can also be dissipated by switching the airflow and the temperature of the heater or air conditioning to the maximum level. Open the windows if necessary.
- When overtaking, pay particular attention to the increased overtaking distance of your vehicle/trailer combination.

  Due to the length of your vehicle/trailer combination you will require a longer stretch of road before switching back to the original lane.

Permissible trailer loads and tongue weights

Weight information

WARNING Risk of accident due to an unbraked trailer with an excessive gross weight

If you pull an unbraked trailer with a gross trailer weight (GTW) of more than 1,653 lbs

(750 kg), the vehicle's brake system may overheat.

This increases the braking distance and may even cause the brake system to fail.

▶ Always use a trailer with a separate braking system if you are pulling a gross trailer weight (GTW) of more than 1,653 lbs (750 kg).

! NOTE Damage to the drive train, transmission or trailer tow hitch due to excess gross combination weight

The permissible gross combination weight is exceeded.

The drive train, the transmission or the trailer tow hitch may be damaged.

▶ Comply with the permissible gross combination weight.

For vehicles with a permissible gross weight of 11030 lbs (5003 kg), the permissible gross combination weight is less than the sum of the permissible gross vehicle weight and the permissible trailer load. If either the vehicle or the trailer is fully laden, the permitted gross vehicle weight or the permitted trailer load values will be reduced accordingly. In this case, you may only partially load the trailer or the vehicle.

The gross trailer weight (GTW) is calculated on the basis of the weight of the trailer plus the weight of its load and equipment. If the trailer is equipped with a separate braking system, then the maximum gross trailer weight is 5000 lbs (2268 kg) or 7500 lbs (3402 kg).

The maximum permissible trailer drawbar noseweight on the ball head is 500 lbs (227 kg) or 750 lbs (340 kg). However, the actual tongue weight must not exceed the value given on the trailer hitch or trailer identification plates. Where the values differ, the lowest shall always apply.

The gross combined weight rating (GCWR) is calculated on the basis of the gross trailer weight plus the gross vehicle weight, including a driver's weight of approximately 150 lbs (68 kg). The maximum permissible gross combination weight is vehicle-specific and equipment-dependent. When driving with a trailer, you should not exceed the maximum permissible gross combination weight rating (GCWR).

The permissible values, which must not be exceeded, can be found in your vehicle documents and on the identification plates of the trailer hitch, the trailer and the vehicle. The values approved by the manufacturer can also be found in the "Technical data" section. Where the values differ, the lowest shall always apply.

Loading the trailer

Use a tongue weight that is as close as possible to the maximum permissible tongue weight. Do not allow the weight to fall below the minimum permissible tongue weight. Otherwise, the trailer may become detached.

- Distribute the load over the vehicle and the trailer so as not to exceed either the maximum permissible values for the gross vehicle weight rating (GVWR) and gross trailer weight (GTW), the gross combination weight rating (GCWR), or the maximum permissible gross axle weight rating (GAWR) and tongue weight (TWR) of your vehicle.
- Add the rear axle load to the drawbar tongue weight (TWR) on the ball head. This will ensure that you do not exceed the permissible gross axle weight rating (GAWR).
- Add the vehicle load to the drawbar tongue weight (TWR) on the ball head. This will ensure that you do not exceed the permissible gross vehicle weight rating (GVWR).

Checking vehicle and trailer weight

- Make sure that the weights of the towing vehicle and the trailer comply with the maximum permissible values. Have the vehicle/trailer combination weighed on a calibrated weighing machine. The vehicle/trailer combination comprises the towing vehicle including driver, passengers and load as well as the laden trailer.
- Check the maximum permissible gross axle weight rating of the front and rear axles (GAWR), the gross trailer weight (GTW), the gross combination weight rating (GCWR) and the drawbar tongue weight (TWR).

Trailer power supply

Incorrect cabling of the connector plug may interfere with other electronic systems in the vehicle. Mercedes-Benz therefore recommends that you have the cabling of the connector plug carried out at a qualified specialist workshop.

You can connect accessories up to a maximum of 240 W to the permanent power supply. Do not charge a trailer battery using the power supply.

Your vehicle may be equipped with a range of electrical equipment for trailer operation. Depending on your trailer, you may need an adapter for the electrical connection between the trailer and your vehicle.

The trailer socket of your vehicle is equipped with a permanent power supply at the factory.

The permanent power supply is supplied via trailer socket pin 4.

Note that the trailer's permanent power supply is not switched off when the vehicle's on-board electrical system voltage is low. This could completely discharge your vehicle's starter battery.

Further information on the electrical equipment currently installed on your vehicle and on installing the trailer electrics can be obtained at a qualified specialist workshop.

Notes on the instrument cluster

WARNING Risk of accident due to an instrument cluster malfunction

In the event of a failure or malfunction of the instrument cluster, you will not recognize limitations in the functions of systems relevant to safety. This may impair operating safety.

▶ Park the vehicle safely as soon as possible and notify a qualified specialist workshop.

The instrument cluster shows the following basic information:

- Speed and engine speed
- Fuel level and coolant temperature
- Indicator and warning lamps

Additional functions available include the following:

- Different menus, e.g. for assistance and navigation
- Status displays for the driving systems
- Display messages
- Information on speed, consumption and range

Overview of the instrument cluster

WARNING Risk of accident due to an instrument cluster malfunction

In the event of a failure or malfunction of the instrument cluster, you will not recognize limitations in the functions of systems relevant to safety. This may impair operating safety.

▶ Park the vehicle safely as soon as possible and notify a qualified specialist workshop.

If you are unsure about the operational safety of your vehicle, park the vehicle safely as soon as possible. Inform a qualified specialist workshop.

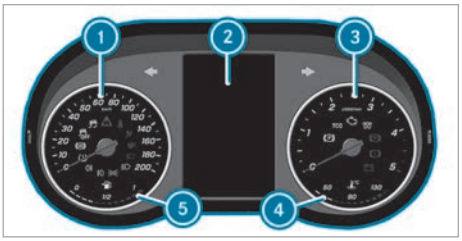

1. Speedometer
2. Instrument cluster display (→ page 187)
3. Tachometer
4. Coolant temperature display
5. Fuel level

   Fuel filler cap location ◂: the fuel filler cap is on the left

During normal driving operation, the coolant temperature display 4 is permitted to rise to the red marking.

Speedometer

In vehicles with Active Distance Assist DISTRONIC, there are illuminated segments on the speedometer dial.

These segments show you what speed range is available:

- Variable limiter activated (→ page 152)

  The segments light up from the start of the scale to the selected limit speed.
- Active Distance Assist DISTRONIC switched on (→ page 155)

  One or two segments light up in the saved speed range.
- Active Distance Assist DISTRONIC detects a vehicle in front.

  The segments light up from the speed of the vehicle in front up to the saved speed.

You can show the speed as a digital speedometer on the display as well.

In some countries, an audible signal will sound and/or a message will appear on the display when the vehicle reaches the maximum speed permitted by law, e.g.at 60 mph (100 km/h).

Tachometer

When the red marking on the tachometer 3 is reached (overspeed range), the fuel supply will be interrupted in order to protect the engine.

NOTE Engine damage due to maximum engine speed being exceeded

If the maximum permissible engine speed is exceeded, the engine may be damaged.

▶ Avoid driving in the red speed range (danger zone).

Coolant temperature display

WARNING Risk of burns when opening the hood

If you open the hood in the event of an overheated engine or fire in the engine compartment, the following situations may occur:

- You may come into contact with hot gases.
- You may come into contact with other escaping hot operating fluids.

▶ Before opening the hood, allow the engine to cool down.

▶ In the event of a fire in the engine compartment, keep the hood closed and call the fire service.

The coolant temperature display is located within the instrument cluster's tachometer.

Outside temperature display

You should pay special attention to road conditions when temperatures are around freezing point.

The outside temperature is shown on the instrument cluster display (→ page 187).

Changes in the outside temperature will be displayed after a short delay.

Operating the on-board computer

WARNING Risk of distraction from information systems and communications equipment

If you operate information systems and communication devices integrated in the vehicle when driving, you could be distracted from the traffic situation. This could also cause you to lose control of the vehicle.

▶ Only operate this equipment when the traffic situation permits.

▶ If you cannot be sure of this, stop the vehicle whilst paying attention to road and traffic conditions and operate the equipment with the vehicle stationary.

You must observe the legal requirements for the country in which you are currently driving when operating the on-board computer.

Scrolling on the menu bar

ⓘ The indicators for the on-board computer will appear on the instrument cluster display .

When the function is switched on, different signal tones will provide feedback while the on-board computer is being operated. These include a signal tone when the end of a list is reached or when a list is being scrolled through.

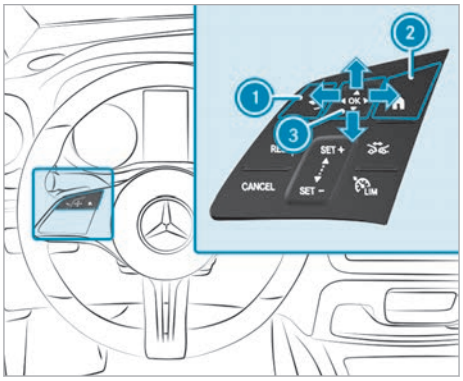

1. Back button
2. Main menu button
3. Touch Control

The on-board computer on the instrument cluster is operated using the controls on the left-hand side of the steering wheel. You can use the Touch Control 3 to navigate vertically and horizontally by swiping with one finger. Confirm the selection by pressing the Touch Control.

ⓘ To operate the Touch Control 3 in the most effective way, use the tip of your thumb if possible. You can also set the sensitivity of the Touch Control on the media display .

▶ Briefly press the main menu button 2.

▶ Select a menu by swiping to the left or right on the Touch Control 3.

▶ **To confirm:** press the Touch Control 3.

Overview of status displays on the display

Instrument cluster display

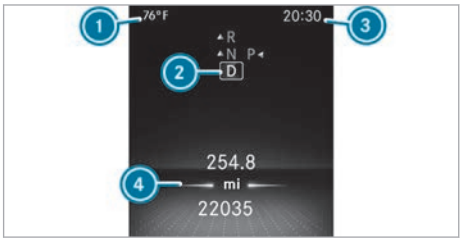

Display (example)

1. Outside temperature
2. Transmission position (→ page 126)
3. Time
4. Display section

Additional indicators on the instrument cluster display:

↑	Gearshift recommendation
	Parking Assist PARKTRONIC switched off
	Cruise control (→ page 152)
	Active Distance Assist DISTRONIC
HOLD	HOLD function (→ page 157)
	Adaptive Highbeam Assist (→ page 91)
	ATTENTION ASSIST switched off
	One of the doors is not fully closed
	Rear window wiper switched on (→ page 100)
SOS NOT READY	Emergency call system not active
	Active Lane Keeping Assist switched off
	Active Brake Assist switched off

Vehicles with Traffic Sign Assist: information and traffic signs detected (→ page 167).

Overview of menus on the on-board computer

Use the left-hand control panel on the multifunction steering wheel button to call up the list of menus and select a menu (→ page 186).

Depending on the vehicle equipment, you can call up the following menus:

- Service (→ page 187) menu
- Assistance (→ page 187) menu
- Trip (→ page 188) menu
- Navigation (→ page 189) menu
- Radio (→ page 190) menu
- Media (→ page 190) menu
- Telephone (→ page 190) menu

Menus and submenus

Calling up functions on the service menu

On-board computer:

→ Service

▶ Select and confirm the desired function.

The following functions are available in the service menu:

- Announcements: message memory (→ page 298)
- Additive (DEF): displaying the AdBlue® fill level (→ page 137)
- Tires:
  - Checking the tire pressure with the tire pressure monitoring system (→ page 257)
  - Restarting the tire pressure monitoring system (→ page 258)
- ASSYST PLUS: calling up the service due date (→ page 220)
- Operating Hours: showing operating hours
- Engine Oil Level: measuring the engine oil level
- Particulate Filter: notes on regeneration (→ page 124)
- Consumption Info: overview of long-term consumption

Calling up the assistant display (Assistance menu)

On-board computer:

→ Assistance

Various driver assistance systems and navigation instructions are shown on the assistant display.

The following displays are available on the Assistance menu:

- Assistant display
- Blind Spot Assist

▶ Select the desired display and confirm.

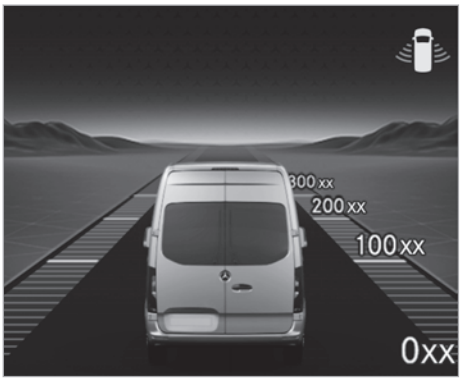

Indicator in the Assistance menu (example)

The following status displays are available on the assistant display:

- Specified distance for Active Distance Assist DISTRONIC
- Blind Spot Assist status display (→ page 172)
- Blind Spot Assist on and ready to issue warnings (lines of the radio waves in green)
- Blind Spot Assist on and not ready to issue warnings (lines of the radio waves in gray)
- Information regarding Lane Keeping Assist over the lane marking

Calling up the Trip menu

On-board computer:

→ Trip

▶ Select the desired display and confirm.

The following displays are available in the Trip menu:

- Basic trip display
- Range and current fuel consumption

  A recuperation display will also be shown. If only a small amount of fuel remains in the fuel tank, a vehicle being refueled will appear in place of the approximate range.
- ECO Display
- From Start
- From Reset
- ATTENTION ASSIST
- Digital speedometer

Standard display (example)

1. Trip distance
2. Total distance

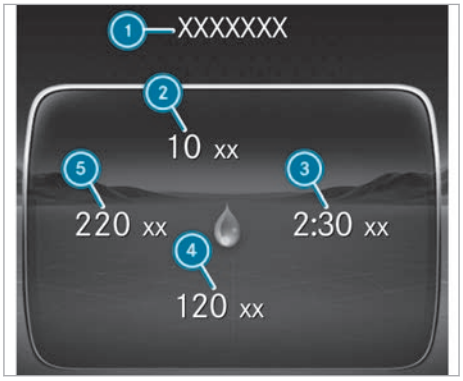

Trip computer display (example)

1. From start or from reset
2. Average fuel consumption (from start or from reset)
3. Driving time (from start or from reset)
4. Average speed (from start or from reset)
5. Distance covered (from start or from reset)

ATTENTION ASSIST display: 15 min since last break

Resetting values on the trip menu of the on-board computer

On-board computer:

→ Trip

ⓘ The wording of the displayed main menu may differ. Therefore, pay attention to the menu overview for the instrument cluster (→ page 186).

You can reset the values of the following functions:

- Trip Distance:
  - Reset Odometer?
- Trip computer:
  - From Start
  - From Reset
- ECO Display

▶ Select the function for which the value is to be reset and confirm this selection.

▶ Confirm the Reset Values? prompt with Yes.

Calling up the Navigation menu

On-board computer:

→ Navigation

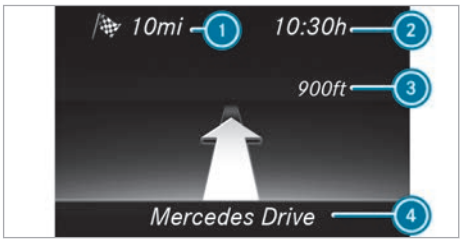

No change of direction announced (example)

1. Distance to the next destination
2. Estimated arrival time
3. Distance to the next change of direction
4. Name of current road

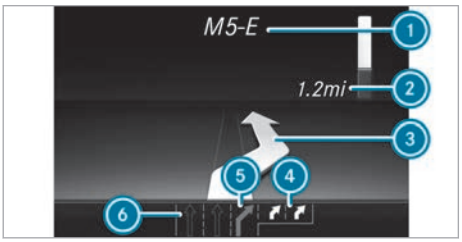

Change of direction announced (example)

1. Road to which the change of direction leads and target direction of the change of direction
2. Distance to the change of direction
3. Change-of-direction symbol
4. Recommended lane and new lane during a change of direction (white)
5. Possible lane
6. Lane not recommended (dark gray)

Other possible displays are available on the Navigation menu:

- Direction of Travel: The direction of travel and the road currently being travelled are displayed.
- New Route... or Calculating Route...: A new route is being calculated.
- Road Not Mapped: The road is not known, e.g. it has only recently been built.
- No Route: The route to the selected destination cannot be calculated.
- Off Map: The map for the current position is not available.
- Area of Dest. Reached: You have reached the destination area.
- ▩ : You have reached the destination or an intermediate destination.

▶ Exit the menu or select and confirm a destination.
If a destination is entered and confirmed, route guidance will start.

▶ If route guidance was previously active, a query will appear asking whether the current route guidance is to be terminated.

▶ Confirm the prompt.
Route guidance will start.

Calling up the Radio menu

On-board computer:

→ Radio

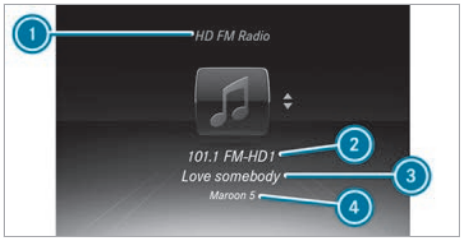

① Frequency range
② Station
③ Name of track
④ Artist's name

The following indicators are available:

- Frequency range
- Station list

▶ Select the radio station's frequency or a radio station from the station list.

▶ Confirm your selection.

When you select a station from the station presets, the preset will appear next to the station name. When you select a saved station in the frequency range, an asterisk will appear next to the station name.

Calling up the Media menu

On-board computer:

→ Media

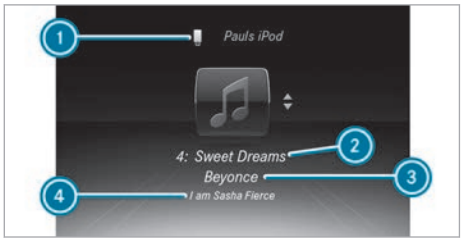

① Media source
② Current track and track number
③ Artist's name
④ Name of album

The following displays are available on the media menu:

- Media source selection list
- Current playback

▶ Select and confirm the media source.

▶ Select and confirm the required playback.

ⓘ This is how to select a station when TV is the media source.

Select the phone number on the Telephone menu

⚠ **WARNING** Risk of distraction from information systems and communications equipment

If you operate information systems and communication devices integrated in the vehicle when driving, you could be distracted from the traffic situation. This could also cause you to lose control of the vehicle.

▶ Only operate this equipment when the traffic situation permits.

▶ If you cannot be sure of this, stop the vehicle whilst paying attention to road and traffic conditions and operate the equipment with the vehicle stationary.

When using the phone, you must observe the legal requirements for the country in which you are currently driving.

Requirements:

- The mobile phone is connected to the multimedia system.

Instrument cluster:

→ Telephone

Select one of the following options:

- Previous calls
- Phone book
- Call status

▶ Select and confirm a telephone number.
If only one telephone number has been saved for the entry: the telephone number will be dialled.

▶ **If multiple telephone numbers have been saved for the entry:** select and confirm a telephone number.
The telephone number will be dialled.

Accepting/rejecting a call

When you receive a call, the Incoming Call message will appear on the display.

▶ Press to accept the call or to reject it.

Adjusting the instrument lighting

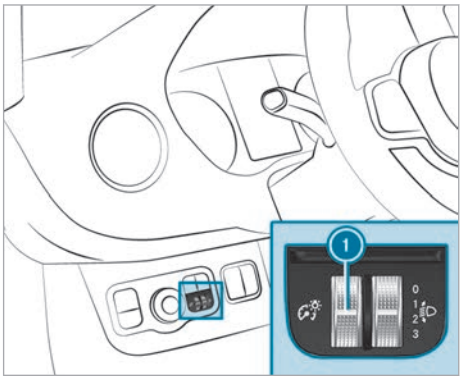

▶ Turn the brightness control (1) up or down. The lighting of the instrument cluster and the controls in the vehicle interior will be adjusted.

Mercedes-Benz Support calls

Making a call via the overhead control panel

ⓘ Mercedes-Benz Support calls are not available in all countries. Contact an Mercedes-Benz to find out whether these functions are available in your country.

ⓘ Please note that product scopes can vary depending on the model series, year of production and equipment, as well as between private and commercial user accounts.

The following Digital Extras are not time-limited:

- Accident and Breakdown Management
- Maintenance management
- Telediagnosis

Other Digital Extras can be extended at the end of the initial term for a fee. The first activation of the Digital Extras is possible within one year of initial registration or commissioning by the customer, depending on which occurs first.

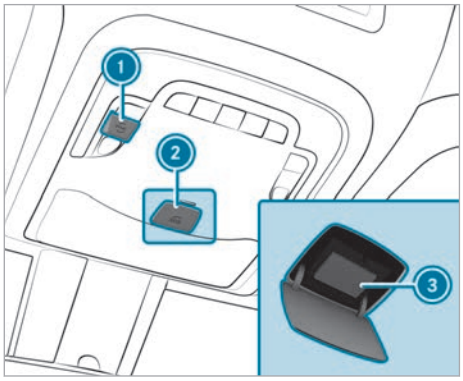

① me button for Mercedes-Benz Support calls
② SOS button cover
③ SOS button (emergency call system)

Making a Mercedes-Benz Support call

▶ Press button ①.

Making an emergency call

▶ Briefly press the cover on SOS button ② to open it.

▶ Press and hold SOS button ③ for at least one second.

If a Mercedes-Benz Support call is active, an emergency call can still be initiated. This has priority over all other active calls.

Information on the Mercedes-Benz Support call via the overhead control panel

A Mercedes-Benz Support call has been made using the me button in the overhead control panel (→ page 192).

You can reach the desired service via the voice dialog system:

- Accident and Breakdown Management
- Mercedes-Benz Support for general information about the vehicle

You can find information on the following topics:

- Activation of Digital Extras
- Operating the vehicle
- Nearest authorized Mercedes-Benz Center
- More products from Mercedes-Benz

Data is transmitted during the connection to Mercedes-Benz Support (→ page 193).

Calling Mercedes-Benz Support using the multimedia system

Requirements

- Access to a mobile phone network is available.
- There is sufficient network coverage from a mobile phone network provider In the respective region.
- The vehicle must be switched on so that vehicle data can be transferred automatically.

Multimedia system:

→ ⌂ ▸▸ Phone ▸▸ ☎

▶ Call Mercedes-Benz Support.
With your consent, the multimedia system sends the required vehicle data. The data transfer is shown in the display.

▶ Select a service using the voice dialog system.
A connection is established with a contact person at Mercedes-Benz Support.

Arranging a service appointment via a Mercedes-Benz Support call

If you have activated the Service Management Digital Extra, relevant vehicle data is automatically sent to Mercedes-Benz Support. You will then receive individual recommendations regarding the maintenance of your vehicle. You will receive an offer for the upcoming maintenance scopes from the service partner stored in your user account.

Regardless of whether you have consented to the maintenance management service, the multimedia system reminds you after a certain amount of time that a service is due. A prompt appears asking if you would like to make an appointment.

▶ **To arrange a service appointment:** select Call. After your confirmation, the vehicle data is sent and Mercedes-Benz Support deals with your appointment. The information is then sent to your desired service outlet.

This will contact you to confirm the appointment and if necessary consult about the details.

ⓘ If you select Call Later after the service message appears, the message is hidden and reappears at a later time.

ⓘ No request for consent to data transmissions takes place if the Accident Recovery and Breakdown Management Digital Extras are activated.

Data transmitted during a Mercedes-Benz Support call

If you initiate a call via Mercedes-Benz Support, data will be transferred. This enables targeted advice and smooth service.

The following requirements must be met for the data transfer:

- The vehicle is switched on.
- The necessary data transmission technology is supported by the mobile phone network provider.
- A sufficient mobile phone connection quality is provided.

Multi-stage transmission depends on the following factors:

- Reason for the initiation of the call
- Available mobile radio transmission technology
- Activated Digital Extras
- Selected service in the voice dialog system

ⓘ A prompt for consent to data transmission is only made if the corresponding Digital Extra has not been activated.

ⓘ The scope of the transmitted data depends on the vehicle model and equipment. For technical reasons not all data is available at all times.

ⓘ The prompt to confirm data transfer does not appear in all countries.

Data transmission when Digital Extras are not activated

If no Digital Extras are activated and the data protection prompt has been confirmed, the following data are transmitted:

- Vehicle identification number
- Time of the call
- Reason for the initiation of the call
- Confirmation of the data protection prompt
- Vehicle country code
- Set language for the multimedia system
- Call number of the communication platform installed in the vehicle

If a call is made for a service appointment via the service reminder, the following data is also transmitted:

- Current mileage and maintenance data

If a call was made via the multimedia system after automatic accident or breakdown detection, the following data is also transmitted:

- Current mileage and maintenance data

If Accident Recovery and Breakdown Management is selected using the voice dialog system and no Digital Extra is activated, but the data protection request has been confirmed, the following data may additionally be requested from the vehicle by Mercedes-Benz Support:

- Current vehicle location

If the data protection request has been declined, the following data will be transferred to enable targeted advice and a smooth service:

- Time of the call
- Reason for the initiation of the call
- Rejection of the data protection prompt
- Vehicle country code
- Set language for the multimedia system
- Call number of the communication platform installed in the vehicle

Data transmission when Digital Extras are activated

Only in the second step and only for the respective activated Digital Extras, further case-specific

data is transmitted in order to enable an optimal service.

An overview of the data transmitted can be found in the respective terms of use for Digital Extras. You can obtain these in the Mercedes-Benz Portal: https://me.secure.mercedes-benz.com

Data processing

The data transmitted as part of the call will be deleted from the transmitting systems once the call has been completed, provided they are not used for other activated Digital Extras.

The case-related data will be processed and stored at Mercedes-Benz Support and, if necessary for case processing, forwarded to the service partner commissioned by Mercedes-Benz Support. Please refer to the data protection notes for Digital Extras either on the Mercedes-Benz website at https://me.secure.mercedes-benz.com or in the pre-recorded message which you hear at the beginning of the call to Mercedes-Benz Support.

ⓘ The recorded message is not available in every country.

Mercedes-Benz Connect

Information on Mercedes-Benz Connect

ⓘ Individual Digital Extras or certain packages are not available in every country. Contact an Mercedes-Benz to find out whether these functions are available in your country.

ⓘ Please note that product scopes can vary depending on the model series, year of production and equipment, as well as between private and commercial user accounts.

You can use the following Digital Extras via the multimedia system or the overhead control panel, if available, for example:

- Accident Recovery (button in the overhead control panel or the situation-dependent display in the multimedia system)
- Breakdown Management (button in the overhead control panel or the situation-dependent display in the multimedia system)
- Emergency call system (automatic emergency call and SOS button)

The Accident Recovery and Breakdown Management Digital Extras and the Mercedes-Benz emergency call center are available to you around the clock.

The button for a Mercedes-Benz Support call and the SOS button are located ion the overhead control panel of the vehicle (→ page 192).

If the multimedia system is available in the vehicle, you can also call Mercedes-Benz Support using the multimedia system (→ page 192).

Please note that Mercedes-Benz Connect is a Mercedes-Benz service. In emergencies, call the national emergency services first using the standard national emergency service phone numbers. In emergencies, you can also use the emergency call system (→ page 235).

Observe the terms of use for the Digital Extras. You can obtain these in the Mercedes-Benz Portal: https://me.secure.mercedes-benz.com

You can find more information on Digital Extras in the Mercedes-Benz Portal: https://me.secure.mercedes-benz.com

Information on Accident and Breakdown Management Digital Extras

ⓘ The Accident and Breakdown Management Digital Extras are not available in all countries. Contact an authorized Mercedes-Benz Center to find out whether this function is available in your country.

The Accident and Breakdown Management can, amongst others, include the following functions:

- Supplement to the Emergency Call System (→ page 235)

  If necessary, the contact person at the Mercedes-Benz emergency call center forwards the call to Accident and Breakdown Management. However, call forwarding is not possible in all countries.
- Breakdown assistance on location by a technician and/or towing away of the vehicle to the nearest Mercedes-Benz

  You may be charged for these services.
- In the event of a breakdown or accident, further vehicle data is sent which enables optimal assistance by Mercedes-Benz Support and the appointed service partner or breakdown mechanic.
- If available: Supplement to the Telediagnosis Digital Extra

  With the Telediagnosis function, specific wear and failure reports are recorded by the service provider, in so far as these can be clearly interpreted and are available through the monitor-

ing of components that are subject to diagnostics.

If your vehicle detects a breakdown or threat of a breakdown, you may be prompted via the multimedia system to contact Mercedes-Benz Support for further help. This prompt in the multimedia system only appears when the vehicle is stationary.

ⓘ These Digital Extras are subject to technical restrictions such as the mobile phone coverage, mobile network quality and the ability of the processing systems to interpret the transferred data. Under certain circumstances, this may result in delays or omission of the message in the multimedia system.

Please note that Mercedes-Benz Support call is a Mercedes-Benz service. In the event of an emergency always call the national emergency services first or use the Mercedes-Benz emergency call system (→ page 235).

You can find more information on Digital Extras in the Mercedes-Benz Portal: https://www.mercedes-benz.de/passengercars/services/mercedes-me.html

Data transmitted with Mercedes-Benz Connect

The data transferred during a Mercedes-Benz Support call depends on:

- The reason for the initiation of the call
- The service selected in the voice dialog system
- The Digital Extras which are activated (→ page 193)

You can ascertain which data is transferred in conjunction with Digital Extras by consulting the currently valid terms of use and data protection notes for Digital Extras. You can find these in your Mercedes-Benz user account.

MB Apps (Digital Extras)

Information on MB Apps/Digital Extras

Requirements

- To use the Digital Extras, registration must have been carried out in the Mercedes-Benz portal.
- You must have agreed with the terms of use for Digital Extras.
- The Digital Extras must be activated.

  The Digital Extras can be activated in the Mercedes-Benz Portal via the path Manage vehicle > My Digital Extras.

With a Mercedes me ID user account you have access to Mercedes-Benz services and offers.

ⓘ Please note that product scopes can vary depending on the model series, year of production and equipment, as well as between private and commercial user accounts.

Availability is country-dependent.

Further information can be obtained from a authorized Mercedes-Benz Center or in the Mercedes-Benz Portal: https://www.mercedes-benz.de/passengercars/services/mercedes-me.html

Calling up a Mercedes me ID user account

Multimedia system:

→ [⌂] ▸▸ MB Apps ▸▸ Mercedes me

Vehicle is linked to a Mercedes me ID user account and Digital Extras are available

▶ Select Mercedes me ID.
Information about the linked Mercedes me ID appears.

Vehicle is not linked to Mercedes me ID user account

ⓘ If you do not yet have a Mercedes me ID, you can create a Mercedes me ID at: https://www.mercedes-benz.de/passengercars/services/mercedes-me.html or in the Mercedes-Benz App. A valid email address or phone number is required for this.

▶ Select [⌂].

▶ Select MB Apps.

▶ Select Mercedes me.

▶ Follow the instructions on the display to link your Mercedes me ID user account with the vehicle.

ⓘ If the Mercedes-Benz App is available on a mobile phone, the vehicle link can be made via the displayed QR code.

Calling up Digital Extras

Requirements

- The vehicle is linked with the Mercedes me ID user account.

Multimedia system:

→ [⌂] ▸▸ MB Apps ▸▸ Mercedes me

▶ Select My Digital Extras.
The Digital Extras for which you have a valid license are displayed in alphabetical order.

Ordering or extending Digital Extras

Use the store to order or extend Digital Extras.

▶ Select [⌂].

▶ Select Store.

Removing the link between the Mercedes me ID user account and the vehicle

Requirements

- The Mercedes me ID of the user account that was first linked to the vehicle is logged in.
- The user profile is synchronised .
- A Mercedes me PIN has been set.

Multimedia system:

→ [⌂] ▸▸ MB Apps ▸▸ Mercedes me

▶ Select Mercedes me ID.

▶ Select Delete vehicle connection.

ⓘ Only the user whose Mercedes me ID user account was first linked to the vehicle can remove the link between all users and the vehicle.

Overview and operation

Notes on MBUX multimedia system

WARNING Risk of distraction from information systems and communications equipment

If you operate information systems and communication devices integrated in the vehicle when driving, you could be distracted from the traffic situation. This could also cause you to lose control of the vehicle.

- Only operate this equipment when the traffic situation permits.
- If you cannot be sure of this, stop the vehicle whilst paying attention to road and traffic conditions and operate the equipment with the vehicle stationary.

You must observe the legal requirements for the country in which you are currently driving when operating the multimedia system.
Depending on the equipment, the range of functions and product designation of your MBUX multimedia system may differ from the description and illustrations in the Operator's Manual.

MBUX stands for Mercedes-Benz User Experience.

Overview of the MBUX multimedia system

ⓘ The functions of your MBUX multimedia system may differ and depend on the following factors:

- Market
- National version
- Technical conditions

Functions and Digital Extras provided by Mercedes-Benz and/or third-party providers may no longer be available when the contractual period expires. This may also be due to technical pre-requisites. There is therefore no entitlement to the continuous provision of functions and Digital Extras.
The described functions may be modified, optimized and adapted after the time of going to press.
Mercedes-Benz therefore reserves the right to introduce changes to functions and Digital Extras.
For these reasons, descriptions and depictions relating to the MBUX multimedia system may, in some cases, differ for your vehicle.

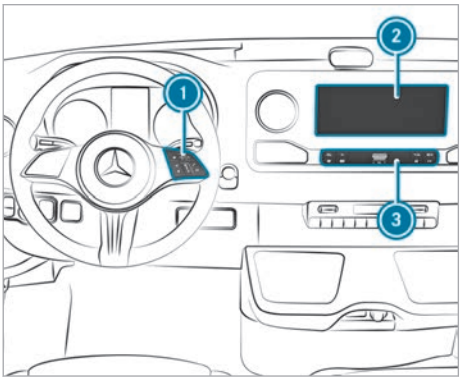

1. Touch Control and multimedia system control panel
2. Media display with touch functionality
3. Operating strip, calls up applications

A multimedia connection unit is found in the storage compartment in the center console and has two type C USB ports.

You can operate the multimedia system with the following central control elements:

- Touch Control 1
- Media display (touchscreen) 2
- Buttons on operating strip 3

ⓘ Alternatively, you can carry out a spoken dialog with the MBUX Voice Assistant.

ⓘ You can find further information about operation as well as about applications and services in the Digital Operating Instructions.

Anti-theft protection

This device is equipped with technical provisions to protect it against theft. Further information on anti-theft protection can be obtained at a Mercedes-Benz service centre.

Home screen overview

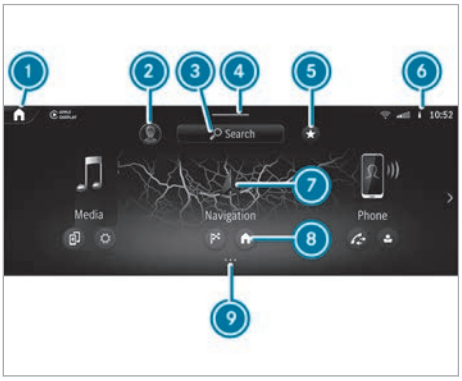

1. On the home screen: displays the first three applications
   In other displays: calls up the home screen
2. Calls up user profile settings and switches user
3. Uses the global search
4. Calls up the Control Center: pull the bar down
5. Calls up favorites
6. Displays in the status line
7. Calls up an application
8. Quick-access to application
9. Index points for selected display area

The following functions are called up in the Control Center:

- Notifications Center
- Favorites
- Vehicle quick-access

Operating the MBUX multimedia system

Using Touch Control

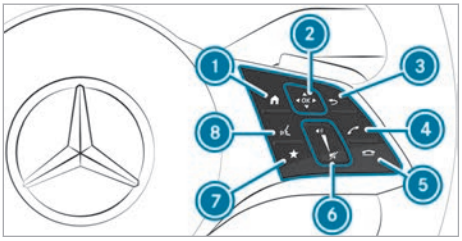

1. [⌂] Shows the home screen
2. Touch Control
   [◀] [▲] [▶] [▼] Swipe in the direction of the arrow (navigate)
   [OK] Press (confirm)
3. [↩] Returns to the previous display
4. [📞] Makes or accepts a call
5. [☎] Rejects or ends a call
6. To increase volume: swipe upwards
   To reduce volume: swipe down
   [🔇] To switch off the sound: press
7. [★] Calls up favorites
8. [🎤] Starts the MBUX Voice Assistant

ⓘ To operate Touch Control ② in the most effective way, use the tip of your thumb if possible.

You can navigate through menus and lists via the touch-sensitive surface of Touch Control ② using **a single-finger swipe**, e.g.:

- ▶ **To enter a character:** select a character using the keyboard and press on Touch Control ②.
- ▶ **To select a menu option:** scroll in a list and press Touch Control ②.
- ▶ **To move the digital map:** swipe in any direction.

Using the touchscreen

- ▶ **To select a menu item or entry:** tap on a symbol or an entry.
- ▶ **To increase the map scale:** tap twice quickly with one finger.
- ▶ **To reduce the map scale:** tap with two fingers.
- ▶ **To enter characters with the keyboard:** tap on a button.
- ▶ **To navigate in menus:** swipe up, down, left or right.
- ▶ **To use handwriting to enter characters:** write the character with one finger on the touchscreen.
- ▶ **To zoom in and out of the map:** move two fingers together or apart.
- ▶ **To enlarge or reduce the size of a section of a website:** move two fingers together or apart.
- ▶ **To turn the digital map:** turn counter-clockwise or clockwise using two fingers.
- ▶ **To move the digital map:** touch the touchscreen and move your finger in any direction.

- **To save the destination in the digital map:** touch the touchscreen and hold until a message is shown.
- **To set the volume on a scale:** touch the touchscreen and move the finger to the left or right.
- **To call up a global menu in the applications:** touch the touchscreen and hold until the Options menu appears.

Calling up applications using a button

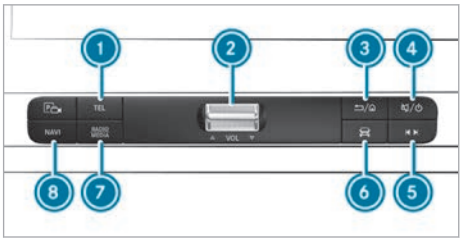

1. TEL button
   Calls up the telephone
2. Volume rocker switch
   Adjusts the volume
3. ⇦ / ⌂ button
   Press briefly: returns to the previous display
   Press and hold: calls up the home screen
4. 🔇 / ⏻ button
   Press briefly: switches sound off
   Press and hold: activates or deactivates the multimedia system
5. Quick-access button for media
   Calls up the control menu of the last active media source
6. Vehicle button
   Sets vehicle functions
7. RADIO MEDIA button
   Pressing repeatedly calls up the desired audio source
8. NAVI button
   Calls up navigation

- **To access stations and music tracks quickly:** press button 5.
  The control menu appears for the audio source that was last selected.
- Swipe to the left or right.
  Radio: the previous or next station is set.
  Media source: the previous or the next music track is selected.

Function of the MBUX Voice Assistant

> ⚠ **WARNING** Risk of distraction from information systems and communications equipment
>
> If you operate information systems and communication devices integrated in the vehicle when driving, you could be distracted from the traffic situation. This could also cause you to lose control of the vehicle.
>
> - Only operate this equipment when the traffic situation permits.
> - If you cannot be sure of this, stop the vehicle whilst paying attention to road and traffic conditions and operate the equipment with the vehicle stationary.

For your own safety, always observe the following points when operating mobile communications equipment and especially your voice control system:

- Please observe the legal requirements for the country in which you are driving.
- If you use the voice control system in an emergency your voice can change and your telephone call, e.g. an emergency call, can thereby be unnecessarily delayed.
- Familiarize yourself with the voice control system functions before starting the journey.

Using the MBUX Voice Assistant, vehicle functions and various areas of the MBUX multimedia system can be operated by voice input. The MBUX Voice Assistant is operational approximately half a minute after switching on the vehicle and can be operated from all seats. Further information and examples of voice commands can be found in the Digital Operating Instructions.

You can use the MBUX Voice Assistant to operate the following functions depending on the vehicle equipment:

- Telephone
- Text message and e-mail
- Navigation
- Radio and media
- Vehicle functions
- Online functions

Full functionality of the voice control system is only available for you with activation of online voice control.

Conducting a dialog

Starting a dialog

- Say "Hey Mercedes" to activate the MBUX Voice Assistant. Voice activation must be switched on in the multimedia system.

or

- Press the button on the multifunction steering wheel.
  A blue line appears in the MBUX multimedia system. The dialog can be started.

For the dialog with the MBUX Voice Assistant, you can use complete sentences of colloquial language as voice commands. Voice activation can also be directly combined with a voice command, e.g. "Hey Mercedes, how fast can I drive?"

Calling up help

- **For information about the MBUX Voice Assistant:** say "Hey Mercedes, what can you do?"
- **Digital Operating Instructions:** "Show me the Operating Instructions". The full extent of the Digital Operating Instructions are available when the vehicle is stationary.

Operating functions (examples)

- **To operate the navigation:** "Search for an Asian restaurant, but not Japanese, in South Manhattan."
- **To operate the phone:** "Call my father."
- **To change the system language to English (short command):** "Change language to English".
- **To operate the radio:** "Show me the list of radio stations."
- **To operate media:** "Switch on random playback."
- **To operate vehicle functions:** "Switch the seat heating to level 2."
- **To operate online functions:** "What's the time in Sydney?"
- **To ask a question about the vehicle:** "Do I have Blind Spot Assist?"

Information on users, suggestions and favorites

WARNING Risk of becoming trapped during adjustment of the driver's seat after calling up a driver profile

Selecting a user profile may trigger an adjustment of the driver's seat to the position saved under the user profile. You or other vehicle occupants could be injured in the process.

- Make sure that when the position of driver's seat is being adjusted using the multimedia system, no people or body parts are in the seat's range of movement.

If there is a risk of someone becoming trapped, immediately stop the adjustment process by:

- a) Tapping on the warning message on the media display.

or

- b) Pressing a position button of the memory function or a seat adjustment switch in the driver's door.
  The adjustment process is stopped.

The driver's seat is equipped with an automatic backing up function.

If the driver's door is open, the driver's seat will **not** be set after calling up the driver's profile.

User profiles and user-specific content

Prerequisites for the vehicle owner:

- You have a Mercedes me ID.
- You have a Mercedes me PIN.
- You have agreed to the terms of use.
- The vehicle is linked to your Mercedes me ID.

ⓘ If one of the pre-requisites listed is missing or if no user profile has been selected, the data described in the following section will be saved in the vehicle as the standard setting. Standard settings can be changed by all vehicle users.

User profiles save personal settings. If the vehicle is used by several people, a person can change their profile settings without changing the settings of other users.

You can individualize a user profile in the vehicle using the set-up assistant or using the settings in your user profile. Some settings such as the Mercedes me PIN and a profile photo are made in

the Mercedes-Benz App or in the Mercedes-Benz Portal.

User-specific content and applications with personal data are protected by different levels of security. To access protected content, the Mercedes me PIN and, depending on the vehicle equipment, biometric sensors can be used.

ⓘ The security level is set by the multimedia system and calculated from the combination of all sensor inputs. Some security levels cannot be turned off.

ⓘ When a user profile is activated, the following personalized comfort systems, for example, can be adjusted or their settings loaded:

- Seat
- Outside mirrors
- Air conditioning adjustment

If the user profile is activated when driving, the driver's seat position will not be adjusted.

Depending on the vehicle equipment you can, as a user, save the following settings, for example:

- Driver's seat, steering wheel and mirror settings
- Climate control
- Ambient lighting
- Radio (including station list)
- Suggestions and favorites

Suggestions

The vehicle can learn the habits of the driver. It then makes suggestions regarding navigation destinations, phone numbers and music preferences. The requirements for that are the selection of a user, your consent to the recording of data and sufficient collected data.

Favorites

Favorites offer you quick access to frequently used applications. 100 favorites are available in total.

Configuring users, suggestions and favourites

Requirements

- The vehicle is stationary.

Multimedia system:

→ [⌂] ▸▸ [👤] ▸▸ Select User

Adding a user

▶ Select ⊕ Add User .
A QR code is loaded.

▶ Scan the displayed QR code with the Mercedes-Benz App or any QR code scanner on a mobile device. If the Mercedes-Benz App is not yet installed on your mobile device, you will be directed to the store on your mobile device.

▶ Follow the directions in the app.
The vehicle is linked to your Mercedes me ID. This automatically creates your user profile in the vehicle.

You will be informed when your user profile is available.

When the vehicle is stationary, the set-up assistant starts automatically after user selection.

Protecting user-specific content and applications

If you add a new user, access protection is already activated for the user profile. The Mercedes me PIN and, depending on the vehicle equipment, biometric sensors are available for access. Biometric sensors in the vehicle must be taught in. The authentication process then takes all taught-in and available sensors into account.

The following user-specific content and applications are protected, for example:

- User selection and user profile settings
- Biometric sensors

  The teaching-in of biometric sensors is protected.
- Suggestions

  The data and determination of the most probable navigation destinations, media sources, radio stations, contacts and messages are protected.
- Mercedes-Benz Store

  The purchase of services is protected.

▶ Switch Protect Content on or off.

▶ Switch Access Protection on or off.

ⓘ When access protection is switched off, your user profile can be viewed from any seat and changes can be made.

ⓘ Access protection is switched on or off on a vehicle-specific basis.

Setting up, editing and deleting biometric recognition

The biometric data models are saved in the sensors in the vehicle. If recognition has been taught-in, this sensor serves as a contributory factor for authentication on the multimedia system.

- Select Protect Content.
- Select Voice Recognition.

ⓘ If necessary, authenticate yourself on the multimedia system.

Setting up voice recognition

- Speak the sentence shown on the media display and follow the voice assistant's instructions.
  If voice recognition was successful, a message appears on the media display. You can unlock your user profile.

ⓘ Avoid background or disturbing noises during voice recognition.

Deleting biometric data

- Tap on [🗑] behind Voice Recognition.
- Select Yes.

Selecting a user

ⓘ When you call up your driver profile, the driver's seat and the steering wheel can be set.

You can cancel the setting process with the following actions:

- Tap on the Tap Here to Cancel message on the media display.
- Press one of the seat operating buttons in the driver's door.

- Select Select User.
- Select a user.
- When requested to do so, authenticate with the Mercedes me PIN or a taught-in biometric characteristic.
  The user profile is loaded and activated.

ⓘ If you select Continue Without Selecting a User, no specific settings for the user profile are loaded.

Configuring and deleting suggestions

- Select [⌂].
- Select Settings.
- Select System.
- Select Suggestions.
- Select [⚙].
- Switch the options on or off individually.
  If an option is switched on and sufficient data has been gathered, personalised suggestions based on your user behaviour will be offered to you on the zero layer. These are, for example, navigation destinations visited, phone numbers dialled as well as suggestions based on your music preferences.
- **To delete collected suggestions:** select [↺].
- Select Yes.
  The suggestions are reset.

Adding favourites from categories

- Select [⌂].
- Select [★].
- Select [>].
- Select [+] Create New Favorite .
- Select the category.
- Select a favourite.

System settings

Overview of the system settings menu

In the system settings menu, you can make settings in the following menus and control elements:

- Display
  - Display brightness
- Control elements
  - Keyboard language and handwriting recognition
  - Sensitivity of the Touch Controls
- MBUX Voice Assistant
- Sound
  - Entertainment
  - Navigation and traffic announcements
  - Telephone
- Data protection
- Connectivity
  - Wi-Fi, Bluetooth®, NFC
- Time & date
- Language
- Units for distance
- System PIN
- Suggestions
- Software update
- System reset

Overview of software updates

Important software updates may be necessary for the security of your multimedia system's data.

Install these updates, or else the security of your multimedia system cannot be ensured.

The multimedia system displays a corresponding message when a software update is available.

If the Automatic Online Update option is active, software updates are downloaded automatically. If the option is deactivated, you will be informed of new software updates once. The software updates are available for downloading for a limited period of time.

Carrying out software updates:

- You can start software updates via the communication module.
- You can start software updates via a Wi-Fi hotspot.
- You can start map updates from an external medium.

ⓘ Online software updates cannot be performed via external Wi-Fi hotspots that are encrypted via TKIP.

ⓘ If the Wi-Fi hotspot requires logging in via the browser, once the connection is successfully established the browser will open in order to start the update. Follow the instructions in the browser in order to start the download.

ⓘ For software updates via the communication module, the vehicle must be connected to the internet and linked to a Mercedes me ID.

ⓘ To complete software updates via Wi-Fi, the vehicle must be connected to an external Wi-Fi hotspot.

A software update consists of three steps:

- Downloading or copying of the data required for installation
- Installation of the downloaded software update
- Activation of the downloaded software update

ⓘ It may be necessary to restart the MBUX multimedia system after completion of a software update.

ⓘ While some software updates are being downloaded, the multimedia system cannot be operated and the vehicle functions may be restricted.

ⓘ Some software updates require a safe vehicle status for the installation to be completed. They can only be carried out in a safely parked vehicle with the vehicle switched off.

For software updates requiring a safe vehicle status: when the last installation step is reached, a message appears on the media display after the vehicle is switched off. Follow the step-by-step instructions on the media display to complete the installation.

There are software updates that can only be installed when the vehicle is safely parked, there are no more people in the vehicle and the vehicle is locked.

Availability of the media display

During the installation of software updates, it is not possible to use the vehicle and media display. You may receive a display message when an installation is running.

ⓘ The display message does not appear every time a software update is installed.

In rare cases, an error can occur during the installation. The multimedia system automatically attempts to restore the previous version.

If restoration of the previous version is not possible, a message appears on the media display.

Failure of the media display

If the media display fails or the display message shown above is shown continuously, several systems such as the rear view camera, Parking Assist PARKTRONIC or climate control are no longer available. Drive on carefully and consult a specialist workshop as soon as possible.

Setting up a Wi-Fi hotspot

Requirements:

- The Wi-Fi function is activated on the multimedia system and the communication device to be connected.
- The communication device to be connected supports at least one of the types of connection described.

  The connection types shown depend on the device to be connected. The function must be supported by the multimedia system and by the device to be connected. The type of connection must be selected on the multimedia system and on the device to be connected.

ⓘ Some functions may first need to be activated on the communication device being connected. More detailed information can be found in the manufacturer's operating instructions.

ⓘ The use of the vehicle data tariff by external devices is not available in all countries.

Multimedia system:

→ [⌂] ▸▸ Settings ▸▸ System ▸▸ Internet and Bluetooth

ⓘ The availability of the functions is dependent on the country.

▶ Select Wi-Fi.
The controller is to the right: Wi-Fi is switched on.

When the Wi-Fi function is switched on, you can connect the multimedia system with external hotspots or make it available as a hotspot for external devices.

When the Wi-Fi function is switched off, it is not possible to establish a hotspot connection.

ⓘ Depending on the vehicle equipment, you can purchase a data package directly from a mobile phone network provider via the Mercedes-Benz Store. To be able to use the data package, you must conclude your own contract with a mobile phone network provider via the Mercedes-Benz Store. This can be terminated at any time and incurs no costs. This contract is a prerequisite for using the services from the previously purchased package. The availability of this option is dependent on the country. If the data package option is not available or can be upgraded, you can purchase data volume directly from the mobile phone network provider for a fee.

ⓘ The use of the vehicle data tariff by external devices is not available in all countries.

Using the multimedia system as a Wi-Fi hotspot

▶ Select MBUX Hotspot.

▶ Select one of the following connection options.

Connecting using a QR code

Requirement: an app for scanning the QR code is installed on the device being connected.

Alternatively: the device being connected has an integrated QR code scanner (see the manufacturer's operating instructions).

▶ Scan the QR code shown.
The Wi-Fi connection is established.

Connecting using NFC

▶ Activate NFC on the device to be connected.

▶ When the NFC symbol is displayed in the MBUX Hotspot menu, hold the device to be connected to the NFC interface.

▶ Follow the instructions on the device.
The Wi-Fi connection is established.

Connecting using a security key

▶ Select the vehicle from the device to be connected. The vehicle is displayed with the MBUX XXXXX network name.

▶ Enter the security key which is shown in the media display on the device to be connected.

▶ Confirm the entry.

Generating a new security key

▶ Select the Generate New Security Key option in the MBUX Hotspot menu.

▶ Confirm the prompt with Yes.
A new security key is generated.

A connection will be established with the newly created security key.

ⓘ When a new security key is generated, all existing Wi-Fi connections are then disconnected. If the Wi-Fi connections are being re-established, the new security key must be entered.

Using a mobile communication device as a Wi-Fi hotspot (tethering)

ⓘ This function is country-dependent.

▶ Select the Manage Internet Access option in the Internet and Bluetooth menu.

ⓘ The Wi-Fi function on the mobile phone and Internet access via Wi-Fi must be activated (see the manufacturer's operating instructions).

▶ Select Search for Access.

▶ Select the network.

▶ Log in to the Wi-Fi network.

or

▶ Select the mobile phone with the [Wi-Fi] Wi-Fi symbol.

ⓘ With external Wi-Fi hotspots, which are encrypted via TKIP, online software updates cannot be carried out via the external Wi-Fi hotspot.

System language

Notes on the system language

This function allows you to determine the language for the menus and the navigation announcements. The selected language affects the characters avail-

able for entry. The navigation announcements are not available in all languages. If a language is not available, the navigation announcements will be in English.

Setting the language

Multimedia system:

→ [⌂] ▸▸ Settings ▸▸ System ▸▸ Language

Setting the system language

A list of the available system languages is shown.

▶ Select a language.
The system language is switched to the selected language.

Resetting the multimedia system (reset function)

⚠ **WARNING** Risk of accidents due to failure of multimedia display functions

While the multimedia system is being reset, its functions such as the rear view camera are not available.

▶ Only reset the multimedia system when the vehicle is stationary.

Requirements:

- The vehicle is switched on.
- Some settings can only be reset when the vehicle is stationary.

Multimedia system:

→ [⌂] ▸▸ Settings ▸▸ System ▸▸ Reset

When resetting the system, personal data and settings are deleted, for example:

- Connected devices
- Individual user profiles
- Biometric data

ⓘ The data used and saved in the multimedia system by the driver assistance systems is deleted.

▶ Select Reset.
A query appears asking if the system should really be reset.

▶ Select Yes.
The multimedia system is reset to its state at delivery. The multimedia system is restarted after the system reset.

ⓘ Due to data protection, as well as the function of individual driving systems and driving safety systems, it is a requirement to carry out a complete system reset before selling the vehicle or transferring it to a third party, or after use as a hire car.

Navigation

Switching on navigation

Multimedia system:

→ [⌂] ▸▸ Navigation

▶ Alternatively, switch on the MBUX Voice Assistant (→ page 200).

▶ Switch to navigation.
The map appears.

ⓘ If you want to switch on navigation using either the [NAVI] button or a search result from the global search and the Activating Navigation Please Wait... message appears on the media display, navigation is not installed. You can have the navigation system retrofitted at an authorized Mercedes-Benz Center.

Navigation overview

Digital map

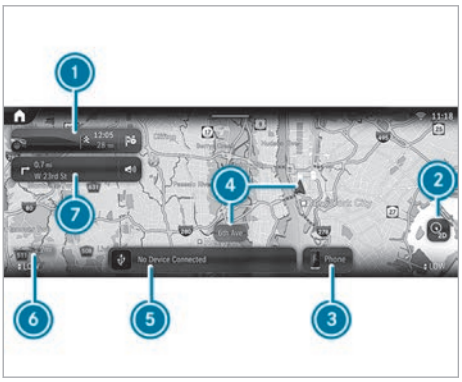

① Navigation module (reduced view)
Route guidance active:
The navigation module shows the information relevant to the route in the zoomed-out view, e.g. the destination or a traffic delay
[⊗] Ends the current route guidance
Tapping opens the navigation module and displays the route overview

② Sets map orientation [⊘] and map type

③ Calls up the telephone menu

4 Current vehicle position (vehicle symbol or arrow)
5 Calls up entertainment applications
6 Elevation and map scale
7 Navigation window shows the next driving maneuver (zoomed out view) or the route monitor (zoomed in view)
Route guidance active: route monitor shows, e.g. route sections, upcoming driving maneuvers with lane recommendations, destination, traffic delays, 3D images at freeway exits, online content

Pressing 2 several times changes the map orientation in this order:

- 2D and to the north
- 2D and direction of travel
- 3D and direction of travel
- Map with complete route

ⓘ If the map is moved, the map switches between 3D direction of travel and 2D north orientation.

The following map types 2 are available:

- Daytime display
- Night-time display
- Satellite map

ⓘ If you notice a problem with the digital map you can report this under https://mapfeedback.here.com/#/report.

Navigation module (expanded view)

Example: route guidance is active
1 Enters an address or POI
2 Destination and time of arrival
Beneath this, the current distance to the destination and the checkered flag
3 Alternative routes
4 Searches for parking
5 Switches traffic information display on or off
6 Makes settings for View, Messages & Acoustic Signals and Route

Entering a destination

Requirements:

- For the online search:
  - There is an Internet connection.
  - Digital Extras are available.
  - You have created a Mercedes me ID.
  - The vehicle is linked to the Mercedes me ID and you have accepted the terms of use.
  - Further information can be found at: https://www.mercedes.me
  - The Digital Extra is available.
  - The Digital Extra has been activated at an authorized Mercedes-Benz Center.

ⓘ If Online Search is not available, the search is performed using the data of the digital map.

Multimedia system:

→ [⌂] ▸▸ Navigation ▸▸ [🔍]

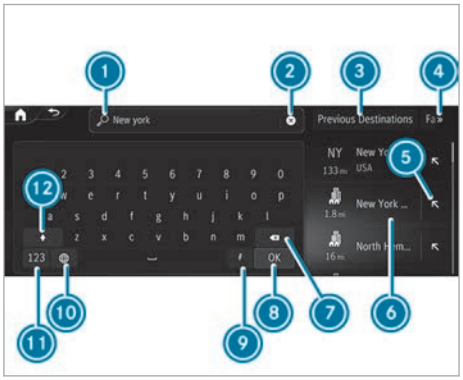

Example: entering a POI or address
1 Input line with current input
2 Deletes an entry
3 Selects previous destinations
4 Displays and selects additional destination searches
5 Adopts the search result in the input line and continues the search
6 Search result
7 Deletes the last character entered
8 Hides the keypad

⑨ Activates voice input
⑩ Sets the written language
⑪ Switches to digits and special characters
⑫ Switches to upper-case or lower-case letters

▶ Enter the destination in ①. The entries can be made in any order.
The search results are displayed in a list.

ⓘ Online search results for POIs may contain additional information, for example opening times and ratings. The information is provided by an online map service.
This online function is not available in all countries.

ⓘ You can enter a destination as a three-word address from what3words.
This option is not available in all countries.

▶ Hide the keyboard with OK.

▶ Select the destination in the list.
The following menu shows the selected destination with the address information and a corresponding map section.

The menu enables the route to be calculated.

ⓘ Observe the notes on the MBUX multimedia system (→ page 197).

Calculating a route and using settings for route guidance

Requirements

- The destination has been entered.
- The destination address is shown.

Example: detailed display
① Calls up alternative routes
② Calculates the route and starts route guidance
③ Selects a point of interest in the near destination
④ Destination address

▶ Select one of the options.

Calling up alternative routes

▶ Select Routes.

▶ Select an alternative route.

Starting route guidance

▶ Select Let's Go!.

Calling up the detailed display with destination address

▶ Pull the bar above ② upwards.
Depending on the destination selected and availability, online content, such as reviews and weather information, is shown.

If the destination is in a different time zone, a message is displayed.

▶ **To share a destination:** select Share.
This option allows you to scan the displayed QR code.

▶ **To save a destination as a favorite:** select Favorite and then an option.

▶ **To call up an Internet address:** if a web address is available, select www.

▶ **To call the destination:** if a telephone number is available, select Call.

Searching for POIs in the vicinity of the destination shown

▶ Select In The Vicinity.

▶ Search using categories, enter a search entry or search for a personal POI .

Adding an intermediate destination to the existing route or starting a new route guidance

▶ Select Add.
The selected destination address is set as the next intermediate destination. Route guidance begins.

▶ **There are already four intermediate destinations:** confirm the prompt with Yes and select an intermediate destination in the route overview, that should be overwritten with the new intermediate destination.

or

▶ Select Replace.
The selected destination address is set as a new destination. Route guidance begins.

Selecting a route type

▶ In the navigation module (expanded view), select ⚙.

- Select Route.
  The route is calculated as a fast route with a short journey time. Trailer mode is available if a trailer has been coupled with the vehicle. If available, you can select online routes. Traffic announcements for the route are taken into account via Reroute Based on Traffic [>].

ⓘ Trailer mode and online routes are not available in all countries and for all vehicles.

Calculating alternative routes

- In the navigation module (expanded view), select [⚙].
- Select View.
- Activate Route Overview after Start.
  Alternative routes are calculated for every route.

Selecting alternative routes

ⓘ If Route Overview after Start has been switched on and a route has been calculated, the function is available.

- In the navigation module (expanded view), select Alternative Routes.
- When the alternative routes have been calculated, display the route in the navigation window by swiping to the right or left.
- Select Start.

Activating a commuter route

ⓘ A user profile has been created and Allow Destination Suggestions has been activated in the user options. Route guidance is not active.

- In the navigation module (expanded view), select [⚙].
- Select Route.
- Activate Commuter Route.
  The navigation system automatically detects that the vehicle is on a commuter route.

  For the daily commuter route, traffic incidents on the route are also reported when driving without active route guidance.
- **To select or delete a commuter route:** selectStart or [×].

Avoiding or using route sections, e.g. highways or ferries

- In the navigation module (expanded view), select [⚙].
- Select Route.
- Select Avoid Options.
- Activate or deactivate the avoid option.

Using map functions

Multimedia system:

Increasing map scale

- When the map is shown, tap twice quickly with one finger on the media display.

or

- Move two fingers apart on the media display.

Decreasing map scale

- Tap with two fingers on the media display.

or

- Move two fingers together on the media display.

Moving the map

- When the map is displayed, swipe in any direction with one finger on the media display.
- **To reset the map to the current vehicle position:** select [⊕] Center.

Selecting map orientation

- Tap repeatedly on the [⊘] compass symbol on the map.

  The map orientations changes in this order:
  - The 2D map view is displayed so that north is always at the top.
  - The 2D map view is aligned to the direction of travel.
  - The 3D map view is aligned to the direction of travel.
  - The map shows the complete route.

Using services

Requirements

- There is an Internet connection.
- Mercedes-Benz Connect is available.
- You have created a user account in the Mercedes-Benz Portal.
- The vehicle is connected with the user account and you have accepted the terms of use for the Digital Extra.

  Further information can be found at: https://www.mercedes.me

- The Digital Extra is available.
- The Digital Extra has been activated at an authorized Mercedes-Benz Center.

Multimedia system:

Showing traffic information

- In the navigation module (expanded view), select ⚙ (→ page 205).
- Select View.
- Activate Traffic.
- Activate Traffic Incidents and Free Flowing Traffic.
  Traffic incidents, for example roadworks, local area reports (e.g. fog) and warning messages, are shown on the route.

  The traffic delay is displayed for the current route. The smallest value for the display for traffic delays is a minute.

Displaying hazard warnings

If hazard warnings are available these can be shown as symbols on the map. The display depends on the settings for the Traffic Incidents option.

- In the navigation module (expanded view), select ⚙ (→ page 205).
- Activate or deactivate Traffic Incidents.
  If the option is activated, all of the symbols are shown.

  If the option is deactivated, the symbols are only shown when there is a hazard warning.

  The following hazards may be shown on the map:
  - Accidents and breakdowns
  - Slippery roads, fog, crosswinds and heavy rain
  - Hazards reported manually
  - Vehicle with active hazard warning light
  - Roadworks
  - Additional hazards (if available)

Displaying online map contents

- In the navigation module (expanded view), select ⚙.
- Select View.
- Switch on an online service, e.g. Weather.
  Current weather information is displayed on the navigation map, e.g. temperature or cloud cover.

  The service information is not shown in all map scales, e.g. weather symbols.

Parking service

! **NOTE** Vehicle damage due to failure to observe the maximum permissible clearance height

If the vehicle height exceeds the maximum permissible clearance height, the roof and other vehicle parts may be damaged.

- Please observe the maximum clearance height indicated.
- If the vehicle exceeds the permissible clearance height, do not drive in.
- Take the modified vehicle height into account in the case of roof superstructures or other carrier systems.

! **NOTE** Vehicle damage due to failure to observe local information and parking conditions

The data is based on the information provided by the respective service providers.

Mercedes-Benz does not guarantee the accuracy of the information provided in relation to the car park or parking area.

- Always observe the local information and conditions.

ⓘ This service is not available in all countries.

- In the navigation module (expanded view), select ⚙ and switch on Parking.
- Tap on P the map.

or

- In the route overview, select P Parking Spaces.
- Select the search position and search filter, e.g. Near destination and Parking garage.
  The map shows car parks suited to the selected settings.
- Select a parking option.
  The map shows the parking options in the vicinity.

The following information is displayed (if available):

- Destination address, distance from current vehicle position and arrival time
- Information on the parking garage/car park facility

  For example, opening times, parking charges, current occupancy, maximum parking time, **maximum access height**.

  The maximum access height shown by the parking service does not replace the need for observation of the actual circumstances.
- Available payment options (Mercedes pay, coins, bank notes, cards)
- Details on parking tariffs
- Number of available parking spaces
- Payment method (e.g. at parking meters)
- Services/facilities at the parking option
- Telephone number

▶ Calculate the route (→ page 207).

Telephone

Telephony

Notes on telephony

⚠ **WARNING** Risk of distraction from operating integrated communication equipment while the vehicle is in motion

If you operate communication equipment integrated in the vehicle when driving, you could be distracted from the traffic situation. This could also cause you to lose control of the vehicle.

▶ Only operate this equipment when the traffic situation permits.

▶ If you cannot be sure of this, stop the vehicle whilst paying attention to road and traffic conditions and operate the equipment with the vehicle stationary.

⚠ **WARNING** Risk of accident from operating mobile communication equipment while the vehicle is in motion

Mobile communication devices distract the driver from the traffic situation. This can also cause the driver to lose control of the vehicle.

▶ As a driver, only operate mobile communication devices when the vehicle is stationary.

▶ As a vehicle occupant, use mobile communication devices only in the designated area, e.g. in the rear passenger compartment.

You must observe the legal requirements for the country in which you are currently driving when operating mobile communication equipment in the vehicle.

Bluetooth® connection:

The menu view and the available functions in the phone menu are partly dependent on the Bluetooth® profile of the mobile phone connected.

If the mobile phone supports these Bluetooth® profiles, the full range of features is available:

- PBAP (Phone Book Access Profile)
  - The mobile phone's contacts are automatically displayed on the multimedia system.
- MAP (Message Access Profile)
  - The message functions of the mobile phone can be used on the multimedia system.

Irrespective of this, Bluetooth® audio functionality can by used with any mobile device.

For information on the functionality of the mobile device to be connected, see the manufacturer's operating instructions.

Network connection:

In the following cases, calls may be interrupted while driving:

- there is insufficient network coverage in the area
- you switch to a transmitting/receiving station in which no communication channel is free.
- the SIM card used is not compatible with the network available
- a mobile phone with "Twincard" is logged into the network with the second SIM card at the same time

The multimedia system supports calls in HD Voice® for improved speech quality. A requirement for this is that the mobile phone and the mobile phone network provider of the person you are calling support HD Voice®.

Depending on the quality of the connection, the voice quality may fluctuate.

Further information can be obtained from an Mercedes-Benz or at: https://www.mercedes-benz-mobile.com/

Telephone menu overview

1. Bluetooth® device name of the currently connected mobile phone/the mobile phones
2. Bluetooth® device name of the other currently connected mobile phone/of the mobile phone
3. Signal strength of the mobile phone network
4. Battery status of the connected mobile phone
5. Options
6. Messages
7. Calls up devices
8. Numerical pad
9. Starts contact search

Telephony operating modes overview

Depending on the equipment, the following telephone operating modes are available:

- One mobile phone is connected to the multimedia system via Bluetooth®.
- Two mobile phones are connected with the multimedia system via Bluetooth® (two phone mode).
  - You can use all the functions of the multimedia system with the mobile phone in the foreground.
  - You can receive incoming calls and messages with the mobile phone in the background.

    You can interchange the mobile phone in the foreground and background.

Connecting a mobile phone

Requirements:

- Bluetooth® is activated on the mobile phone (see the manufacturer's operating instructions).
- Bluetooth® is activated on the multimedia system.

Multimedia system:

→ [⌂] ▸▸ Phone ▸▸ [⚙] ▸▸ Devices ▸▸ Devices

Searching for a mobile phone

▶ Select Connect New Device.

Connecting a mobile phone

Authorization takes place using Secure Simple Pairing.

▶ Select a mobile phone.
A code is displayed in the multimedia system and on the mobile phone.

▶ If both codes match, confirm the code on the mobile phone.

Functions in the Telephony menu

The functions available in the Telephony menu include the following:

- Making calls, e.g.:
  - [✆] Accepting a call
  - [☎] End Call
  - [👥] Create Confer. Call
  - Accepting or rejecting a waiting call
- Managing contacts, e.g.:
  - Downloading mobile phone contacts
  - Editing the format of a contact's name
  - Deleting favorites
- Receiving and sending messages, e.g.:
  - Using the read-aloud function
  - Dictating a new message

Overview of Smartphone Integration

With Smartphone Integration, you can use certain functions on your mobile phone via the multimedia system display.

Only one mobile phone at a time can be connected via Smartphone Integration to the multimedia system. Also for use with two phone mode with smartphone integration, only one additional mobile

phone can be connected using Bluetooth® with the multimedia system.

The full range of functions for Smartphone Integration is only possible with an Internet connection. The appropriate application must be downloaded on the mobile phone to use Smartphone Integration. The mobile phone must be switched on and connected to the multimedia system via the USB port using a suitable cable.

Apps for Smartphone Integration:

- Apple CarPlay® (wireless connection via Bluetooth® also possible)
- Android Auto (wireless connection via Bluetooth® also possible)

ⓘ For safety reasons, the first activation of Apple CarPlay® or Android Auto on the multimedia system must be carried out when the vehicle is stationary with the parking brake.

You can start Smartphone Integration using the Devices menu.

You can end Smartphone Integration via the Devices or by disconnecting the connecting cable between the mobile phone and multimedia system.

ⓘ Mercedes-Benz recommends disconnecting the connection via the device manager or the connecting cable only when the vehicle is stationary.

Overview of transferred vehicle data

When using Smartphone Integration, certain vehicle data is transferred to the mobile phone. This enables you to get the best out of selected mobile phone services. Vehicle data is not directly accessible.

The following system information is transmitted:

- Software release of the multimedia system
- System ID (anonymized)

The transfer of this data is used to optimize communication between the vehicle and the mobile phone.

To do this, and to assign several vehicles to the mobile phone, a vehicle identifier is randomly generated.

This has no connection to the vehicle identification number (VIN) and is deleted when the multimedia system is reset (→ page 205).

The following vehicle status data is transmitted:

- Transmission position engaged
- Distinction between parked, standstill, rolling and driving
- Day/night mode of the instrument cluster
- Drive type

The transfer of this data is used to alter how content is displayed to correspond to the driving situation.

The following position data is transmitted:

- Coordinates
- Storing
- Compass direction
- Acceleration direction

The mobile phone uses this data to improve the accuracy of navigation, for example, when driving through a tunnel.

Radio and media

Overview of the symbols and functions in the media menu

Symbol	Designation	Function
	Play	Select to start or continue playback.
	Pause	Select to pause the playback.
	Repeat a track	Select to repeat the current track or the active playlist. • Select once: the active playlist is repeated. • Select twice: the current track is repeated. • Select three times: the function is deactivated.
	Random playback	Select to play back the tracks in random order.
/	Skip forwards/ back	Select to skip to the next or to the previous track.
	Additional options	Select to show additional options.
	Categories	Select to show or search through available categories such as playback lists, albums or artists.
	Search	Select to search in the active menu. You can search for artists, genres or moods, for example.
	Settings	Select to make settings.
	Home	Select to return to the home screen.
	Messaging	Select to call up messaging.
	Full screen	Select to switch to full screen mode.

The following functions and settings are available in the Media menu:

- Connecting external data storage media with the multimedia system (e.g. using USB or Bluetooth®)
- Playing back audio files

Overview of the symbols and functions in the radio menu

Symbol	Designation	Function
	Home	Select to return to the home screen.
	Messaging	Select to call up messaging.
/	Skip forwards/ back	Select to skip to the next or to the previous station.

Symbol	Designation	Function
	Settings	Select to have further options shown. The setting options are country-dependent.
HD	HD Radio™	Select to switch the HD Radio™ function on or off. This function is not available in all countries.
	Station list	Select to have the station list shown.
	Search	Select to search in the active menu. You can search for artists, genres or moods, for example.

Depending on the frequency band selected, different functions are available to you.

Select the desired frequency band in the radio menu head runner.

Sound settings

Overview of functions in the Sound menu

The setting options and functions available depend on the sound system installed. You can find out which sound system is installed in your vehicle in the Digital Operator's Manual.

Standard sound system

The following functions are available:

- Equalizer
  - Treble, mid-range and bass
- Balance and fader
- Volume
  - Automatic adjustment

Notes on loading guidelines

DANGER Risk of poisoning from exhaust gases

Combustion engines emit poisonous exhaust gases, such as carbon monoxide. Exhaust gases can enter the vehicle interior if the rear-end door is open when the engine is running, especially if the vehicle is in motion.

- Always switch off the engine before opening the rear-end door.
- Never drive with the rear-end door open.

WARNING Risk of injury from unsecured objects in the vehicle

When objects are unsecured or inadequately secured, they can slip, tip over or be thrown about, striking vehicle occupants.

This also applies to:

- Luggage or loads
- Seats which have been removed and are being transported in the vehicle in an exceptional case

There is a risk of injury, particularly in the event of braking maneuvers or abrupt changes in direction.

- Always stow objects in such a way that they cannot be tossed about.
- Before traveling, secure objects, luggage or load to prevent them slipping or tipping over.
- When a seat is removed, keep it preferably outside the vehicle.

WARNING Risk of injury due to objects being stowed incorrectly

If objects in the vehicle interior are stowed incorrectly, they may slide or be thrown around and hit vehicle occupants. In addition, cup holders, open stowage spaces and mobile phone receptacles will not always be able to retain all objects that they contain in the event of an accident.

There is a risk of injury, particularly in the event of braking maneuvers or abrupt changes in direction.

- Always stow objects such that they cannot be thrown around in such situations.
- Always make sure that objects do not protrude from stowage spaces, parcel nets or stowage nets.
- Close the lockable stowage spaces before starting a journey.
- Stow and secure objects that are heavy, hard, pointed, sharp-edged, fragile or too large in the cargo compartment.

WARNING Risk of burns from the tailpipe and tailpipe trims

The exhaust tailpipe and tailpipe trims can become very hot. If you come into contact with these parts of the vehicle, you could burn yourself.

- Always be particularly careful around the tailpipe and the tailpipe trims and supervise children especially closely in this area.
- Allow vehicle parts to cool down before touching them.

If you are using a roof luggage rack, please note the maximum roof load and the maximum load capacity of the roof luggage rack. (→ page 296)

Camera-based driving systems and the sensor functions of the inside rear-view mirror may be impaired if you are transporting a load on the roof and it protrudes more than 16 in (40 cm) over the front edge of the roof. Therefore, make sure that the load does not protrude by more than 16 in (40 cm).

The handling characteristics of your vehicle are dependent on the load distribution.

Therefore, please observe the following notes when loading:

- When transporting a load, never exceed the gross vehicle weight rating or the gross axle weight rating for the vehicle (including occupants). The figures are specified on the vehicle identification plate on the B-pillar.
- The load must not protrude above the upper edge of the seat backrests.
- If possible, always transport the load in the load compartment.
- Fasten the load to the cargo tie-down rings and distribute the load evenly among them.
- Use cargo tie-down rings and fastening materials which are suitable for the weight and size of the load.

Notes on distributing the load within the vehicle

NOTE Risk of damage to the floor covering

Excessive point loading on the cargo compartment floor or on the load area can negatively affect the driving characteristics and could damage the floor covering.

- **Vehicles with rear-wheel drive:** distribute the load uniformly. When doing so, ensure that the overall center of gravity of the load is always as low and close to the center as possible and between the axles near the rear axle.
- **Vehicles with all-wheel drive:** distribute the load uniformly. When doing so, ensure that the overall center of gravity of the load is always as low and close to the center as possible and between the axles.

For Cargo Van and Tourers:

- always transport loads in the cargo compartment.
- always place the load against the seat backrests of the rear passenger compartment bench seat.
- move large and heavy loads as far towards the front of the vehicle as possible, against the rear passenger compartment bench seat. stow loads flush behind the rear passenger compartment bench seat.
- always additionally secure the load with suitable load securing aids or tie down.
- the load must not protrude above the upper edge of the seat backrests.
- transport loads behind seats that are not occupied.
- If the rear passenger compartment bench seat is not occupied, insert the seat belts crosswise into the seat belt buckle of the opposite seat belt.

Securing loads

Notes on load securing

WARNING Risk of accident and injury due to incorrect use of the lashing straps

The following can occur:

- The tie-down eyes may detach or the lashing strap may tear if the permissible load is exceeded
- The load cannot be restrained

The load can slip, tip over or be flung about, striking vehicle occupants.

- Always tension the lashing straps in the proper manner and only between the described tie-down eyes.
- Always use lashing straps designed specifically for the loads.

Observe the information relating to the maximum loading capacity of the individual cargo tie-down point. If you combine various cargo tie-down points to secure a load, always take the maximum loading capacity of the weakest cargo tie-down point into account. For example, during an emergency stop, forces act which can multiply the weight of the load. Always use several cargo tie-down points to distribute the load. Spread the load evenly between the cargo tie-down points or tie-down eyes.

Observe the Operator's Manual or the lashing strap manufacturer's instructions for how to use the lashing strap.

Observe the information relating to the maximum loading capacity of the cargo tie-down points (→ page 296).

As the driver, you are responsible for ensuring the following:

- The load is secured against slipping, tipping, rolling or falling off.

  Take usual traffic conditions as well as swerving or full brake application and bad roads into account.
- The applicable requirements and guidelines relating to load-securing practices are met.

  If this is not the case, this may constitute a punishable offense, depending on local legislation and any ensuing consequences. Observe country-specific laws.

Make sure that the load is secure before every journey and at regular intervals during a long journey. Adjust the load securing as necessary. Information on how to secure loads correctly can be obtained from the manufacturers of the load securing aids or lashing systems for load securing, for example.

When securing loads, observe the following:

- Fill spaces between the load and the cargo compartment walls or wheel wells. For this purpose, use rigid load securing aids, such as chocks, wooden shims or padding.
- Secure non-tilting and stable loads in all directions.

  Use the cargo tie-down points or tie-down eyes and the loading rails in the cargo compartment.

  Only use lashing equipment tested in accordance with applicable standards (e.g. DIN EN), forexample, locking bars, lock rods or lashing nets and lashing straps. Always use the cargo tie-down points closest to the load and pad sharp edges.

  Loads, and heavy loads in particular, should preferably be secured using the tie-down eyes.

ⓘ You can obtain tie downs tested in accordance with current standards (e.g. DIN EN) from any specialist company or from a qualified specialist workshop.

Notes on the partition

Without a partition, vehicles that are registered as commercial vehicles (vehicle class N1, N2) do not fulfill the ISO 27956 standard, which describes fixtures for securing loads correctly in delivery vans. If the vehicle is used to transport goods, retrofitting the partition is strongly recommended, as properly securing the load in a vehicle without a partition will always be a complex operation.

ⓘ Nothing may be stowed in the area between the back of the seats and the partition.

Overview of cargo tie-down point

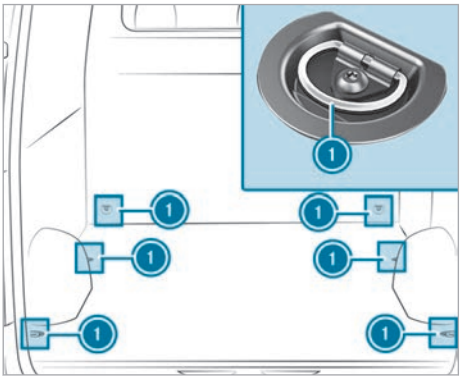

Cargo tie-down points (example: cargo van without loading rails)

1 Cargo tie-down rings

Secure loose loads with an approved lashing net or a tarp.

Always fasten the lashing net or tarp to all available cargo tie-down points. Make sure that the fastening hooks are secured against accidental opening.

If your vehicle is equipped with loading rails in the cargo floor, you can place lashing rods directly in front of and behind the load. The lashing rods directly absorb the potential shifting forces.

Securing loads on the cargo floor by lashing them down is recommended only for lightweight loads. Lay anti-slip mats under the load to assist in securing it.

installing and removing tie-down eyes

▶ **To install:** slide the tie-down eye through a recess in the loading rail close to the load until the locking mechanism engages in the recess.

ⓘ When you pull the locking mechanism up and out of the recess, the tie-down eye is able to move within the loading rail. Make sure that the locking mechanism is always engaged in a recess.

▶ Check the tie-down eye for firm seating.

▶ **To remove:** pull the locking mechanism up and pull the tie-down eye towards the locking mechanism and out of the loading rail through a recess.

Carrier systems

Information on the roof luggage rack

WARNING Risk of injury if maximum roof load is exceeded

The vehicle center of gravity and the usual driving characteristics as well as the steering and braking characteristics will change.

If you exceed the maximum roof load, the handling as well as steering and braking characteristics are severely affected.

▶ Always comply with the maximum roof load and adjust your driving style.

NOTE Vehicle damage due to failure to observe the maximum permissible clearance height

If the vehicle height exceeds the maximum permissible clearance height, the roof and other vehicle parts may be damaged.

▶ Please observe the maximum clearance height indicated.

▶ If the vehicle exceeds the permissible clearance height, do not drive in.

▶ Take the modified vehicle height into account in the case of roof superstructures or other carrier systems.

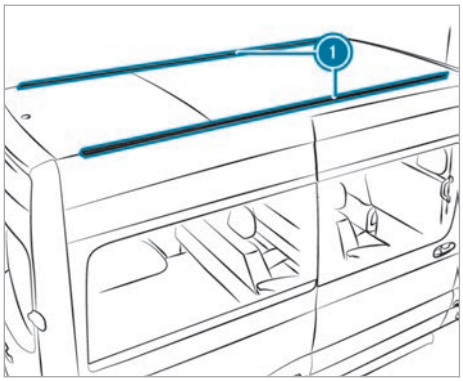

① Mounting rails

Information about the maximum roof load can be found in the "Technical data" section (⟶ page 296).

Observe the following points for installing roof luggage racks:

- Tighten the screws of the roof luggage rack to a torque of 6.0 lb-ft (8 Nm) – 7.4 lb-ft (10 Nm) in the designated sliding blocks.
- The tightened screws should not touch the rails.
- Ensure that the sliding blocks are not located in the areas around the plastic caps.
- The sliding blocks must have the right cross-section.
- The insides of the mounting rails must be free of dirt.
- Re-tighten the screws uniformly after around 300 miles (500 km).

Mercedes-Benz recommends that you use only roof luggage racks that have been tested and approved for Mercedes-Benz. These will help to prevent vehicle damage.

Have mounting rails retrofitted only at a qualified specialist workshop. Otherwise, you could damage the vehicle.

If your vehicle is equipped with mounting rails on the roof, you can install a roof luggage rack on the roof. Special mounting elements (sliding blocks) are available as accessories for this purpose.

These mounting elements are available from any authorized Mercedes-Benz Center.

Placing a load on the wheel arch

Comply with the important safety notes under "Notes on loading" (⟶ page 215).

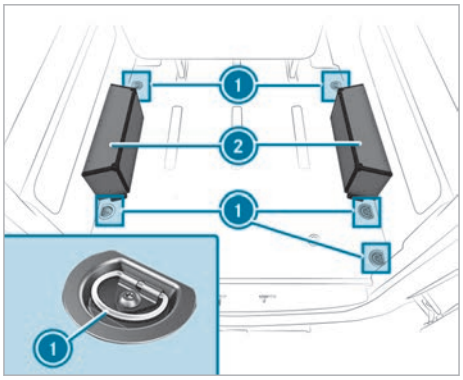

▶ Place the objects on wheel arch ② and lash them using tie-down eyes ① (⟶ page 217).

ⓘ A wheel arch may be subjected to a load of 330 lb (150 kg).

ASSYST PLUS service interval display

Function of the ASSYST PLUS service interval display

The ASSYST PLUS service interval display on the instrument cluster provides information on the remaining time or distance before the next service due date.

You can hide this service message by using the back button on the left-hand side of the steering wheel.

Under arduous operating conditions or if the vehicle is subjected to increased loads, the ASSYST PLUS service interval display may shorten the service interval.

You can obtain further information regarding servicing of your vehicle from a qualified specialist workshop, e.g. a Mercedes-Benz Service Center.

Displaying the service due date

Requirements

- The ignition is switched on.

On-board computer:

Service ▸▸ ASSYST PLUS

The next service due date is displayed.

▶ **To exit the display:** press the 'Back' button on the left-hand side of the steering wheel.

Refer also to the following related topic:

- Operating the on-board computer (→ page 186)

Carrying out maintenance work on a regular basis

! NOTE Premature wear through failure to observe service due dates

Service work which is not carried out at the right time or incompletely can lead to increased wear and damage to the vehicle.

▶ Observe the specified service intervals. If there are any uncertainties regarding the service due date, for example if the battery is disconnected, operating conditions are difficult, etc., contact a qualified specialist workshop.

▶ Have the prescribed service work carried out at a qualified specialist workshop.

Special service requirements

The prescribed service interval is based on normal vehicle use. Perform maintenance work more often than prescribed if the vehicle is operated under arduous operating conditions or increased loads.

Examples of arduous operating conditions:

- Regular city driving with frequent intermediate stops
- Mainly short-distance driving
- Frequent operation in mountainous terrain or on poor road surfaces
- When the engine is regularly left idling for long periods
- Operation in particularly dusty conditions and/or if air-recirculation mode is frequently used

In such operating conditions or similar, have the interior air filter, air filter, engine oil and oil filter changed more frequently, for example.

Check the tires more frequently if the vehicle is operated under increased stress. You can obtain further information at a qualified specialist workshop.

Non-operational times with the battery disconnected

The ASSYST PLUS service interval display can calculate the service due date only when the battery is connected.

▶ Call up and make a note of the service due date in the instrument cluster before disconnecting the battery.
- Displaying the service due date (→ page 220).

Engine compartment

Opening and closing the hood

⚠ WARNING Risk of accident due to driving with the hood unlocked

The hood may open and block your view.

▶ Never release the hood when driving.

▶ Before every trip, ensure that the hood is locked.

WARNING Risk of accident and injury when opening and closing the hood

The hood may suddenly drop into the end position.

There is a risk of injury for anyone in the hood's range of movement.

▶ Do not open or close the hood if there is a person in the hood's range of movement.

WARNING Risk of burns when opening the hood

If you open the hood in the event of an overheated engine or fire in the engine compartment, the following situations may occur:

- You may come into contact with hot gases.
- You may come into contact with other escaping hot operating fluids.

▶ Before opening the hood, allow the engine to cool down.

▶ In the event of a fire in the engine compartment, keep the hood closed and call the fire service.

WARNING Risk of injury due to moving parts

Components in the engine compartment can continue to run or start unexpectedly even when the ignition is switched off.

Observe the following before performing tasks in the engine compartment:

▶ Switch off the ignition.

▶ Never touch the danger zone surrounding moving components, e.g. the rotation area of the fan.

▶ Remove jewelery and watches.

▶ Keep items of clothing and hair away from moving parts.

WARNING Risk of injury from touching live components

The ignition system and the fuel injection system operate with a high voltage. You could receive an electric shock.

▶ Never touch components of the ignition system or fuel injection system when the vehicle is switched on.

Live component parts of the fuel injection system include the injectors, for example.

Live component parts of the ignition system include the following, for example:

- Ignition coils
- Spark plug connectors
- Diagnostic socket

WARNING Risk of burns from hot component parts in the engine compartment

Certain component parts in the engine compartment can be very hot, e.g. the engine, the cooler and parts of the exhaust system.

▶ Allow the engine to cool down and only touch component parts described in the following.

If you have to carry out any work in the engine compartment, touch only the following component parts:

- Hood
- Engine oil filler opening cap
- Washer fluid reservoir cap
- Coolant expansion reservoir cap

WARNING Risk of injury from using the windshield wipers when the hood is open

If the windshield wipers start moving when the hood is open, you could be trapped by the wiper linkage.

▶ Always switch off the windshield wipers and vehicle before opening the hood.

NOTE Damage to hood or windshield wipers when opening the hood

If the windshield wipers have been folded back from the windshield when the hood is opened, the windshield wipers or the hood may be damaged.

▶ Ensure that the windshield wipers have not been folded back from the windshield.

Opening the hood

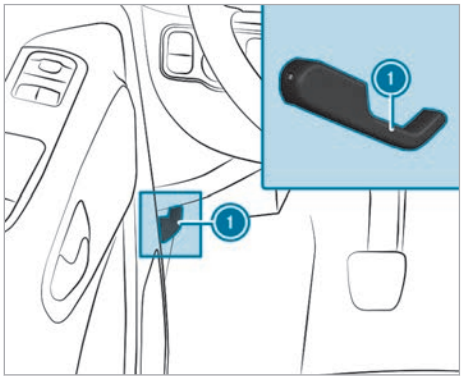

- Park the vehicle safely and on a surface that is as level as possible.
- Switch off the vehicle.
- Secure the vehicle against rolling away.

WARNING Risk of injury when the hood is opened

The hood may suddenly drop into the end position.

There is a risk of injury for anyone in the hood's range of movement.

- Before releasing the hood, ensure that the support is firmly seated in the holder.
- Open the hood only when there is no-one in its range of movement.

- Pull handle (1) to release the hood.
- Reach into the gap and push the hood catch handle upwards.
- Open the hood and hold it in the open position.

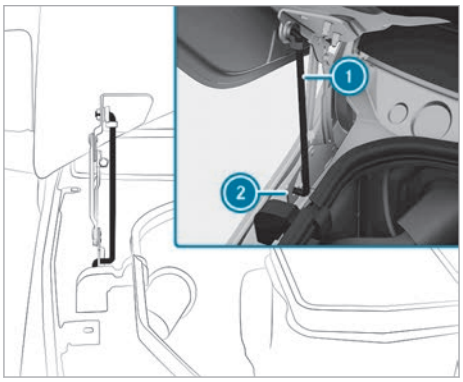

- Take support (1) from the holder on the hood and pull it downwards.
- Insert the support into the holder below (2).

Closing the hood

WARNING Risk of fire due to flammable materials in the engine compartment or on the exhaust system

Flammable materials may ignite.

- Ensure that there are no flammable external materials in the engine compartment or on the exhaust system after maintenance work has been carried out.

WARNING Risk of accident and injury when opening and closing the hood

The hood may suddenly drop into the end position.

There is a risk of injury for anyone in the hood's range of movement.

- Do not open or close the hood if there is a person in the hood's range of movement.

NOTE Damage to the hood

Pushing the hood closed with your hands could damage it.

- To close the hood, let it drop from the specified height.

- Lift the hood slightly.
- Move support (1) to the holder on the hood and apply light pressure to engage it.

- Lower the hood and let it drop from a height of approximately 0.5 ft (15 cm).
- If it is still possible to lift the hood a little, open the hood again and let it drop from a height of approximately 0.7 ft (20 cm) until it engages correctly.

Engine oil

Checking the engine oil level with the on-board computer

Requirements

- The vehicle is level during the measuring process.
- The hood is closed.
- Depending on the driving profile, the oil level can be displayed only after a driving time of up to 30 minutes and only when the vehicle is switched on.

On-board computer:

→ Service ▸▸ Engine Oil Level

One of the following messages appears on the instrument cluster:

- Measuring Engine Oil Level...: it is not yet possible to display the oil level. Repeat the query after driving for a maximum of 30 minutes.
- Engine Oil Level OK and the bar indicating the oil level on the instrument cluster is green and is between "min." and "max.": the oil level is correct.
- Engine Oil Level Drive Until the Engine is Warm: warm up the engine to operating temperature.
- Engine Oil Level Before Measurement Ensure Vehicle Is on Level Ground: park the vehicle on a level surface.
- Engine Oil Level Refill 1,0 liq. quart and the bar indicating the oil level on the instrument cluster is orange and is below "MIN": add 1.0 US qt (1 l) of engine oil.
- Reduce Engine Oil Level and the bar indicating the oil level on the instrument cluster is orange and is above "MAX": drain off excess engine oil.
  Consult a qualified specialist workshop.
- For Engine Oil Level, Switch On Vehicle: switch on the vehicle.
- Engine Oil Level System Inoperative: the sensor is defective or not connected. Consult a qualified specialist workshop.
- Engine Oil Level System Currently Unavailable: close the hood.

ⓘ **Vehicles with cold oil level display:** the oil level will automatically be displayed on the instrument cluster after the vehicle has been non-operational for an extended period. If it is not possible to measure the engine oil level, a corresponding message is relayed.

ⓘ The result of the electronic measurement always takes precedence over other measurements.

Adding engine oil

⚠ **WARNING** Risk of burns from hot component parts in the engine compartment

Certain component parts in the engine compartment can be very hot, e.g. the engine, the cooler and parts of the exhaust system.

- Allow the engine to cool down and only touch component parts described in the following.

If you have to carry out any work in the engine compartment, touch only the following components:

- Hood
- Engine oil filler opening cap
- Washer fluid reservoir cap
- Coolant expansion reservoir cap

⚠ **WARNING** Risk of fire and injury from engine oil

If engine oil comes into contact with hot component parts in the engine compartment, it may ignite.

- Make sure that no engine oil is spilled next to the filler opening.
- Allow the engine to cool off and thoroughly clean the engine oil from component parts before starting the vehicle.

! **NOTE** Engine damage caused by an incorrect oil filter, incorrect oil or additives

- Do not use engine oils or oil filters other than those which meet the spec-

ifications necessary for the prescribed service intervals.

Mercedes-Benz recommends using original or tested replacement and service parts.

- Do not alter the engine oil or oil filter in order to achieve longer change intervals than prescribed.
- Do not use additives.
- Follow the instructions on the service interval display regarding oil changes.

NOTE Damage caused by adding too much engine oil

Excessive engine oil can damage the engine or the catalytic converter.

- Have excess engine oil removed in a qualified specialist workshop.

ENVIRONMENTAL NOTE Environmental damage caused by spilling oil when refilling

Damage is caused to the environment if spilled oil enters the soil.

- When refilling oil, make sure none is spilled.

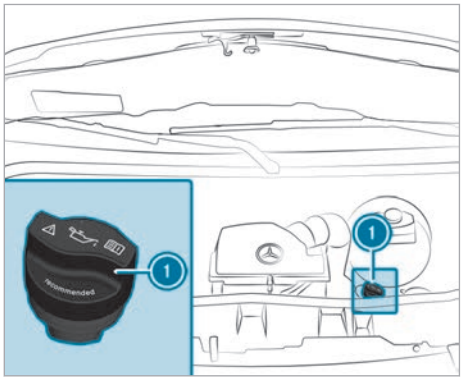

OM654 engine

- Turn cap (1) counter-clockwise and remove it.
- Add engine oil.
- Replace cap (1) on the filler opening and turn it clockwise until it engages.
- Check the oil level again. Check using the on-board computer (→ page 223), check with the oil dipstick .
- If your vehicle has an engine that does not have an oil dipstick, check the oil level with the on-board computer after the next journey (→ page 223).

It is necessary to run the engine for an extended period after each oil top-up to correctly detect the oil level. Fill level changes during oil top-ups may not be immediately visible. Depending on the driving profile, the new oil level can be displayed only after a driving time of up to 60 minutes.

To avoid damage due to overfilling, do not add more than 0.26 gal (1 liter).

Check the oil level again after an extended period.

Checking/adding coolant

WARNING Risk of burns from hot component parts in the engine compartment

Certain component parts in the engine compartment can be very hot, e.g. the engine, the cooler and parts of the exhaust system.

- Allow the engine to cool down and only touch component parts described in the following.

If you have to carry out any work in the engine compartment, touch only the following component parts:

- Hood
- Engine oil filler opening cap
- Washer fluid reservoir cap
- Coolant expansion reservoir cap

WARNING - Risk of fire and injury from antifreeze

If antifreeze comes into contact with hot component parts in the engine compartment, it may ignite.

- Allow the engine to cool down before adding antifreeze.
- Make sure that no antifreeze spills out next to the filler opening.
- Thoroughly clean off any antifreeze from component parts before starting the vehicle.

WARNING Risk of scalding from hot coolant

You may scald yourself if you open the cap when the drive system is at normal operating temperature.

- Allow the drive system to cool down before opening the cap.
- When opening the cap, wear protective gloves and safety glasses.
- Open the cap slowly to release pressure.

Check and add coolant only when the vehicle is stationary and level and the engine and engine cooling system have cooled down. The coolant temperature must be below 122 °F (50 °C).

The coolant temperature must be below 122 °F (50 °C).

NOTE Paintwork damage due to coolant

If coolant gets on painted surfaces, the paintwork can be damaged.

- Add coolant carefully.
- Remove spilled coolant.

Checking the coolant level

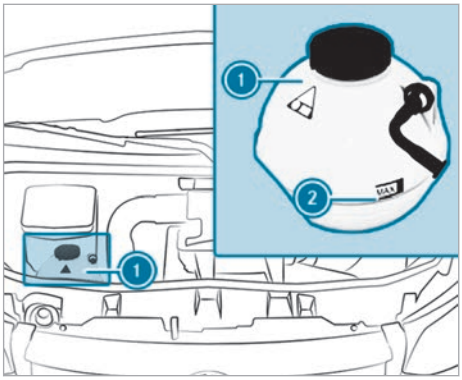

Coolant expansion reservoir (example)

- Park the vehicle on a level surface.
- Open the hood (→ page 220).
- Slowly turn coolant expansion reservoir cap (1) half a turn counter-clockwise to release overpressure.
- Continue to turn coolant expansion reservoir cap (1) and remove it.
- Check the coolant level.
  There is enough coolant in the coolant expansion reservoir if the coolant reaches lower MAX mark (2).

Adding coolant

- Refill the coolant to lower MAX mark (2) on the coolant expansion reservoir.

Use only coolant approved by Mercedes-Benz to avoid damaging the engine cooling system.

- Replace coolant expansion reservoir cap (1) and tighten it in a clockwise direction.
- Start the vehicle.
- After about five minutes, switch off the vehicle again and allow it to cool down.
- Check the coolant level again and add coolant as necessary.

ⓘ Observe the additional coolant information (→ page 289).

Filling up the windshield washer system

WARNING - Risk of fire and injury from windshield washer concentrate

Windshield washer concentrate is highly flammable. It could ignite if it comes into contact with hot engine component parts or the exhaust system.

- Make sure that no windshield washer concentrate spills out next to the filler opening.

WARNING Risk of burns from hot component parts in the engine compartment

Certain component parts in the engine compartment can be very hot, e.g. the engine, the cooler and parts of the exhaust system.

- Allow the engine to cool down and only touch component parts described in the following.

If you have to carry out any work in the engine compartment, touch only the following component parts:

- Hood
- Engine oil filler opening cap
- Washer fluid reservoir cap
- Coolant expansion reservoir cap

NOTE Damage to the exterior lighting due to unsuitable windshield washer fluid

Unsuitable windshield washer fluid may damage the plastic surface of the exterior lighting.

- Only use windshield washer fluids that are also suitable for use on plastic surfaces, e.g. MB SummerFit or MB WinterFit.

Adding washer fluid

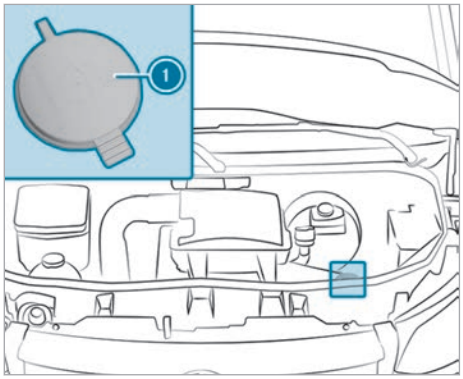

Washer fluid reservoir (example)

- Pre-mix the washer fluid to the correct mixing ratio in a container.
- Park the vehicle on a level surface and secure it against rolling away (→ page 140).
- Open the hood (→ page 220).
- Pull cap 1 of the washer fluid reservoir upwards by the tab.
- Pour in the pre-mixed washer fluid.
- Push cap 1 onto the filler opening until it audibly engages.
- Close the hood (→ page 220).

ⓘ Mix the washer fluid with windshield washer concentrate all year round. Observe the information on windshield washer fluid in the technical data (→ page 290).

ⓘ Observe all additional information on windshield washer fluid (→ page 290).

Cleaning the water drain valve of the air intake box

WARNING Risk of injury due to moving parts

Components in the engine compartment can continue to run or start unexpectedly even when the ignition is switched off.

Observe the following before performing tasks in the engine compartment:

- Switch off the ignition.
- Never touch the danger zone surrounding moving components, e.g. the rotation area of the fan.
- Remove jewelery and watches.
- Keep items of clothing and hair away from moving parts.

WARNING Risk of burns from hot component parts in the engine compartment

Certain component parts in the engine compartment can be very hot, e.g. the engine, the cooler and parts of the exhaust system.

- Allow the engine to cool down and only touch component parts described in the following.

If you have to carry out any work in the engine compartment, touch only the following components:

- Hood
- Engine oil filler opening cap
- Washer fluid reservoir cap
- Coolant expansion reservoir cap

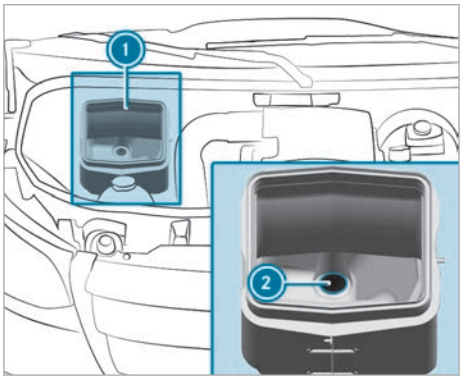

- Open the hood (→ page 220).

- Remove dirt from water drain valve (2) of air intake box (1).

Draining the fuel filter

WARNING Risk of fire or explosion from fuel

Fuels are highly flammable.

- Fire, open flames, smoking and creating sparks must be avoided.
- Before filling up, switch off the vehicle, and, if applicable, the auxiliary heating.

WARNING Risk of fire and explosion due to fuel

Fuels are highly flammable. There is a risk of fire and explosion due to contact with hot component parts.

- Allow the engine and the exhaust system to cool down.

NOTE Engine damage due to delayed draining of the fuel filter

Vehicles with a diesel engine: delayed draining of the fuel filter can lead to engine damage.

If the indicator lamp lights up, drain the fuel filter immediately.

ENVIRONMENTAL NOTE Environmental pollution due to disposal in a non-environmentally responsible manner

- Dispose of the hydrogen fuel mixture in an environmentally friendly manner.

Vehicles with rear wheel drive:

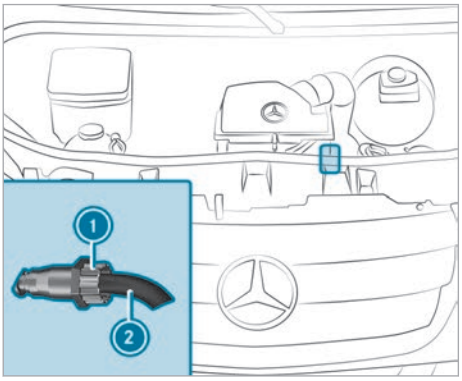

OM654 engine

- Park the vehicle in a safe location and secure it against rolling away.
- Switch off the auxiliary heating .
- Switch off the vehicle.
- Open the hood (→ page 220).
- Place a suitable collecting pan beneath dump hose (2).
- Switch on the vehicle.
- Open drain screw (1) until the water/fuel mixture emerges from dump hose (2).
- Close drain screw (1) immediately upon approx. 0.2 qt (0.2 liters) of the water/fuel mixture being collected.
  After 30 seconds, the electrical fuel pump will automatically stop discharge of the water/fuel mixture.
- Switch the vehicle off after draining.
- Dispose of the collected water/fuel mixture in an environmentally responsible manner, e.g. at a qualified specialist workshop.
- Ensure that drain screw (1) has been closed.
  If the vehicle is running while drain screw (1) is open, fuel will be lost through dump hose (2).
- Close the hood (→ page 220).
- **The indicator lamp does not go out after draining:** drain the fuel filter again.
- **The indicator lamp does not go out after the second draining:** consult a qualified specialist workshop.

Mercedes-Benz recommends that you have the fuel filter drained at a qualified specialist workshop.

Vehicles with all-wheel drive:

▶ Have the fuel filter drained by a qualified specialist workshop.

Cleaning and care

Information on washing the vehicle in an automatic car wash

⚠ **WARNING** Risk of accident due to reduced braking effect after washing the vehicle

The braking effect is reduced after washing the vehicle.

▶ After the vehicle has been washed, brake carefully while paying attention to the traffic conditions until the braking effect has been fully restored.

! **NOTE** Damage to the vehicle due to automatic braking

If one of the following functions is activated, the vehicle will brake automatically in certain situations:

- Active Brake Assist
- Active Distance Assist DISTRONIC
- HOLD function

To avoid damage to the vehicle, deactivate these systems in the following or similar situations:

▶ When towing

▶ In a car wash

! **NOTE** Damage due to unsuitable car wash

▶ Before driving into a car wash make sure that the car wash is suitable for the vehicle dimensions.

▶ Ensure there is sufficient ground clearance between the underbody and the guide rails of the car wash.

▶ Ensure that the clearance width of the car wash, in particular the width of the guide rails, is sufficient.

! **NOTE** Risk of damage to the paintwork and plastic components

If you wash your vehicle in Touchless Automatic Car Wash systems that use special cleaning agents, the cleaning agents used can damage the paintwork or plastic components of the vehicle.

▶ Do not wash the vehicle in Touchless Automatic Car Wash systems that use special cleaning agents.

To avoid damage to your vehicle, observe the following before using an automatic car wash:

- The car wash is suitable for the size of the vehicle.
- Active Brake Assist is deactivated.
- Active Distance Assist DISTRONIC is deactivated.
- The HOLD function is switched off.
- The side windows and the sliding window are completely closed.
- The outside mirrors are folded in and any additional antenna is removed.
- The blower for ventilation and heating is switched off.
- The windshield wiper switch is in position 0.

If the vehicle is extremely dirty, wash off excess dirt before cleaning the vehicle in an automatic car wash.

After leaving the car wash, pay attention to the following:

- The outside mirrors are fully folded out again and any additional antenna is mounted again.
- Remove wax residues on the windshield and wiper rubbers to prevent smearing and reduce wiper noise.

Remove wax residues from the camera lens in vehicles with a rear view camera (→ page 230).

Information on using a power washer

⚠ **WARNING** Risk of an accident when using power washers with round-spray nozzles

The water jet can cause externally invisible damage.

Components damaged in this way may unexpectedly fail.

- Do not use a power washer with round-spray nozzles.
- Have damaged tires or chassis parts replaced immediately.

NOTE Damage to component parts due to improper high-pressure cleaning

Components can be damaged if the distance of the high-pressure nozzle is too small.

- Maintain a minimum distance of about 12 in (30 cm) between the high-pressure nozzle and car parts.
- Do not use a power washer with a round-spray nozzle.
- Keep the water jet moving constantly while cleaning.
- Do not clean the following components with the power washer:
  - Electrical components
  - Plug connectors
  - Rear view camera
  - Drivetrain
  - Seals
  - Hoses

NOTE Damage caused by the use of a power washer in the vehicle interior

The pressurized water created by the power washer and the associated spray could cause considerable damage to the vehicle.

- Never use a power washer in the vehicle interior.

NOTE Damage to the exhaust gas after-treatments through incorrect cleaning

Cleaning the system when warm or the effects of direct water jets into the exhaust pipe can damage the exhaust gas aftertreatment.

- Only clean the system when the system is cold.
- Do not direct the water jet into the exhaust pipe.

Never use a power washer in the vehicle interior. The pressurized water created by the power washer and the associated spray could cause considerable damage to the vehicle.

To avoid damage to your vehicle, observe the following when using a power washer:

- Maintain a distance of at least 11.8 in (30 cm) to the vehicle when using 25° flat-spray nozzles and concentrated-power jets and observe the information in the equipment manufacturer's operating instructions.
- Do not direct the nozzle of the power washer directly at sensitive parts such as tires, gaps, electrical components, batteries, illuminants and louvers.
- Maintain a minimum distance of 19.7 in (50 cm) for a rear view camera.

Washing the vehicle by hand

Observe the legal requirements. For example, in a number of countries, washing by hand is permitted only in specially designated wash bays. In this case, make sure that a specially designated wash bay is used for washing by hand.

- Use a mild cleaning agent, e.g. a car shampoo which has been approved for Mercedes-Benz.
- Wash the vehicle with lukewarm water and a soft car sponge. Do not expose the vehicle to direct sunlight when washing the vehicle.
- Carefully spray the vehicle with water and dry off with a chamois. Ensure that the water jet is not pointed directly towards air inlet grilles. Do not leave the blower running.
- Do not let the cleaning agent dry on the paintwork.

When operating the vehicle in winter, remove all traces of road salt deposits carefully and as soon as possible.

Notes on paintwork care

NOTE Paintwork damage and corrosion due to inadequate care

Failure to promptly and thoroughly remove dirt from bird droppings or other residue could result in paintwork damage and corrosion at a later date.

- Clean dirt off paint and matte finish thoroughly and as soon as possible.

Observe the notes on cleaning and care to avoid paintwork damage.

Paint

- Insect remnants: soak with insect remover and then wipe the treated areas clean.
- Bird droppings: soak with water and then wipe the treated areas clean.
- Tree resin, oils and greases: remove by rubbing gently with a cloth soaked in surgical spirit or lighter fluid.
- Coolant and brake fluid: remove with a damp cloth and clean water.
- Tar stains: use tar remover.
- Wax: use silicone remover.
- Do not attach stickers, films or similar materials.
- Remove any staining as soon as possible.

Matte finish

- Use only care products approved for Mercedes-Benz.
- Do not polish the vehicle and light-alloy wheels.
- Use only car washes that comply with the latest engineering standards. If in doubt, always consult the car wash operator, in particular regarding whether the car wash is suitable for cleaning and care of matte paint finishes.
- Do not use a car wash program with a final hot wax treatment.
- Do not use paint cleaners, buffing or polishing products, gloss preservers, e.g. wax.
- Always have paintwork repairs carried out at a qualified specialist workshop.

Information on care of vehicle parts

⚠ **WARNING** Risk of injury if unsuitable climbing aids are used

If you use openings in the vehicle's body work or detachable parts as steps, you could:

- Slip and/or fall.
- Damage the vehicle and thus slip and fall.

▶ Always use anti-slip, stable climbing aids, e.g. a suitable ladder.

⚠ **WARNING** Risk of entrapment if the windshield wipers are switched on while the windshield is being cleaned

If the windshield wipers are set in motion while you are cleaning the windshield or wiper blades, you can be trapped by the wiper arm.

▶ Always switch off the windshield wipers and the vehicle before cleaning the windshield or wiper blades.

⚠ **WARNING** Risk of burns from the tailpipe and tailpipe trims

The exhaust tailpipe and tailpipe trims can become very hot. If you come into contact with these parts of the vehicle, you could burn yourself.

▶ Always be particularly careful around the tailpipe and the tailpipe trims and supervise children especially closely in this area.

▶ Allow vehicle parts to cool down before touching them.

! **NOTE** Damage caused by the use of openings in the bodywork or detachable part as a step

Using the lower guide of the sliding door (carriage) as a step can damage the trim and/or mechanism of the sliding door.

▶ Do not use the guide of the sliding door (carriage) as a step.

ⓘ Information on suitable cleaning agents or cleaning cloths can be obtained from a qualified specialist workshop.

Observe the following information:

	Notes on cleaning and care	Preventing damage to the vehicle
Wheels/ rims	Use water and acid-free wheel cleaner.	• Do not use acidic alloy wheel cleaners to remove brake dust. Wheel bolts and brake components could otherwise become damaged. • To avoid corrosion of brake discs and brake linings, drive for a few minutes after cleaning before parking the vehicle. The brake disks and pads will heat up and dry out.
Windows	Clean windows on the inside and outside with a damp cloth and with a cleaning agent recommended for Mercedes-Benz.	Do not use dry cloths or abrasive or solvent-based cleaning agents to clean the insides of windows.
Wiper blades	With the wiper blades folded out, carefully clean them with a damp cloth.	Do not clean the wiper blades too often.
Exterior lighting	Clean the lenses with a wet sponge and mild cleaning agent (e.g. car shampoo).	Use only cleaning agents or cloths suitable for plastic lenses.
Sensors	Clean the sensors in the front and rear bumper and in the radiator shells with a soft cloth and car shampoo.	When using a power washer, maintain a minimum distance of 11.8 in (30 cm).
Rear view camera and 360° camera	Use clean water and a soft cloth to clean the camera lens.	Do not use a power washer.
Trailer hitch	• Remove traces of rust on the ball (e.g. with a wire brush). • Remove dirt with a lint-free cloth. • After cleaning, lightly oil or grease the ball head. • Observe the notes on care in the trailer hitch manufacturer's operating instructions.	Do not clean the ball neck with a power washer or solvent.
Sliding door	• Remove foreign objects from the vicinity of the contact plates and contact pins of the sliding door. • Clean the contact plates and contact pins with a mild cleaning agent and a soft cloth.	Do not oil or grease the contact plates or the contact pins.
Steps	• Clean the electrically operated steps and their housing with a power washer. • After cleaning, spray the lateral guides with silicone spray. • Clean the steps in the bumper with a power washer.	Do not use oil or grease as an anti-seize agent.

Notes on cleaning and care of the interior

WARNING Risk of injury from plastic parts breaking off after the use of solvent-based care products

Care and cleaning products containing solvents can cause surfaces in the cockpit to become porous. When the airbags are deployed, plastic parts may break away.

▶ Do not use any care or cleaning products containing solvents to clean the cockpit.

WARNING Risk of injury or fatal injuries from bleached seat belts

Bleaching or dyeing seat belts can severely weaken them.

This can, for example, cause seat belts to tear or fail in an accident.

▶ Never bleach or dye seat belts.

DANGER Risk of fatal injuries due to electric shock

If you clean the 115 V socket with a wet cloth, you can get an electric shock.

There is a risk of fatal injury!

▶ Avoid the area around the 115 V socket when cleaning.

NOTE Damage to property due to incorrect leather care

The steering wheel, seat covers and other parts of the vehicle interior can be made of leather.

Leather becomes brittle and can crack if it is incorrectly cared for or cleaned.

▶ If it gets dirty, thoroughly wipe it with a damp cloth (water or mild soapy water) or use leather care agents or cleaners that have been recommended and approved by Mercedes-Benz. Then wipe it over again with a dry cloth.

▶ Do not use a microfiber cloth for cleaning.

▶ Do not soak the leather.

▶ Do not use cleaning agents containing solvents such as tar remover or wheel cleaner, polishes or waxes.

NOTE Property damage due to disinfectants

The interior includes a number of sensitive surfaces such as displays, plastics and leather.

Disinfectants can contain alcohol and other substances that penetrate and damage surfaces. Technology behind buttons and displays can also be damaged.

▶ Do not use disinfectant on interior surfaces.

To prevent damage to the vehicle, observe the following notes for cleaning and care:

Seat belts

- Clean with lukewarm, soapy water.
- Do not use chemical cleaning agents.
- Do not dry seat belts by heating them to over 176°F (80°C) or exposing them to direct sunlight.

Plastic trim

- Clean with a damp microfiber cloth.
- If very dirty: use a cleaning agent recommended for Mercedes-Benz.
- Do not attach stickers, films or similar materials.
- Do not allow to come into contact with cosmetics, insect repellent or sun creams.

Headliner

- Clean with a brush or dry shampoo.

Carpet

- Use a carpet and textile cleaning agent recommended for Mercedes-Benz.

Genuine leather seat covers

NOTE Damage caused by wrong cleaners

▶ Do not use solvent-based cleaning agents such as tar remover or wheel cleaner; neither should you use polishes or waxes. Otherwise you may damage the finish.

- Clean with a damp cloth and then wipe with a dry cloth.
- Leather care: use a leather care agent recommended for Mercedes-Benz.
- Do not allow the leather to become too damp.
- Do not use a microfiber cloth.

Imitation leather seat covers

- Vacuum up dirt such as crumbs or dust and then use a damp cotton cloth and a 1% soap solution to clean the entire seat cover.
- Use cleaning and care products recommended for Mercedes-Benz.
- Do not use a microfiber cloth.
- Do not use any oil-based cleaning and care products.
- Do not spot-clean.

Cloth seat covers

- Vacuum up dirt such as crumbs or dust and then use a damp microfiber cloth and a 1% soap solution to clean the entire seat cover.
- Use cleaning and care products recommended for Mercedes-Benz.
- Do not use any oil-based cleaning and care products.
- Do not spot-clean.

Steering wheel and gear or selector lever

- Clean with a damp cloth.

Steering wheel made from genuine leather

NOTE Damage caused by wrong cleaners

▶ Do not use solvent-based cleaning agents such as tar remover or wheel cleaner; neither should you use polishes or waxes. Otherwise you may damage the finish.

- Clean with a damp cloth and a 1% soap solution and then wipe with a dry cloth.
- If very dirty: use a cleaning agent recommended for Mercedes-Benz.
- Leather care: use a leather care agent recommended for Mercedes-Benz.
- Do not allow the leather to become too damp.
- Do not use a microfiber cloth.

ⓘ Leather is a natural product. It exhibits natural surface properties, such as differences in structure, marks caused by growth and injury or subtle color differences.

Pedals and floor mats

- Clean with a damp cloth.
- Do not use any cleaning and care products.

Genuine wood and trim elements

- Clean with a microfiber cloth.
- Black piano-lacquer look: clean with a damp cloth and soapy water.
- If very dirty: use a cleaning agent recommended for Mercedes-Benz.
- Do not use any cleaning agents, polishes or waxes containing solvents.

Vehicle interior

- Clean with a damp cloth.
- Do not use a power washer.
- Allow the vehicle interior to dry completely after cleaning.
- Do not allow liquids to penetrate into gaps or cavities.

Curtains

- The curtains may be dry-cleaned only.
- Do not wash the curtains.

Emergency

Removing the safety vest

▶ Remove the safety vest from the storage compartment in the driver's door.

ⓘ Safety vests can also be stored in the storage compartments of the rear doors and the co-driver door.

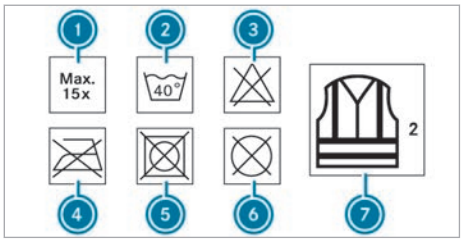

① Maximum number of washes
② Maximum wash temperature
③ Do not bleach
④ Do not iron
⑤ Do not tumble dry
⑥ Do not dry-clean
⑦ This is a class 2 vest

The safety vest only fulfills the legally required standards if it is the correct size and is completely closed.

Replace the safety vest if:

- Damaged or if the reflex strips are dirty
- The maximum permitted number of washes is exceeded
- The safety vest's fluorescence has faded

Removing the first-aid kit (soft sided)

The first-aid kit (soft sided) is located in the storage compartment in the front passenger door.

▶ Remove the first-aid kit (soft sided) from the storage compartment.

Removing the warning lamp

The warning lamp is located in the stowage compartment in the front-passenger door.

▶ Remove the warning lamp from the stowage compartment.

Emergency hammer

⚠ **WARNING** Risk of injury if the emergency hammer is used

If you smash the windows with the emergency hammer, you may injure yourself:

- Due to glass splinters flying around
- On glass splinters lying around
- On pieces of glass that remain in the window seal

▶ It is essential to protect skin and eyes, e.g. with an item of clothing.

▶ Be particularly careful when leaving the vehicle through a smashed window.

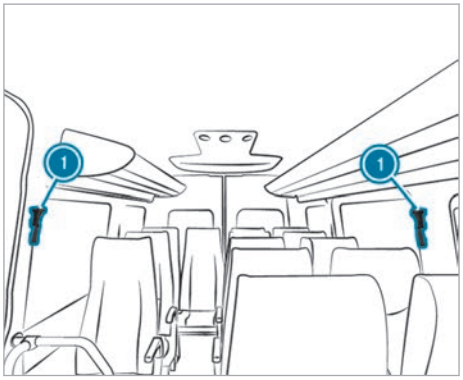

Position of the emergency hammers

An emergency exit window in the passenger compartment is equipped with emergency hammer ①. Emergency hammer ① will be located at either the right or left emergency exit window and marked with a label.

In case of danger, remove emergency hammer ① from the holder and smash the windows.

ⓘ Once the windows have been smashed:

- the passengers in the vehicle can leave via the windows.
- helpers can gain access to the passenger compartment from outside via the windows.

When leaving the vehicle through the windows, be aware of the vehicle height and local conditions. Provide particular assistance to children and people of shorter stature as they leave the vehicle.

Emergency Call System

Information on the emergency call system

USA only: Your vehicle is equipped with the Emergency Call System ("eCall"). This feature can help save lives in the event of an accident. eCall in no way replaces assistance provided from dialing 911.

The emergency call system ("eCall") is available for your vehicle for 10 years ex works.

eCall only functions in areas where mobile phone coverage is available from the mobile phone network provider. Insufficient network coverage from the wireless service providers may result in an emergency call not being transmitted.

eCall is a standard feature in your Mercedes-Benz vehicle. In order to function as intended, the system relies on the transmission of data detailed in the Transmitted Data section that follows (→ page 236). To disable eCall, a customer must visit an authorized Mercedes-Benz Service department to deactivate the vehicle's communication module.

Deactivating this module prevents the activation of all Digital Extras. After the deactivation of eCall, automatic emergency call and manual emergency call will not be available.

The vehicle must be switched on before an automatic emergency call can be made.

ⓘ eCall is activated at the factory.

ⓘ eCall can be deactivated by an authorized Mercedes-Benz dealer. Please note that in the event ownership of the vehicle is transferred to another owner in its deactivated state, eCall will remain deactivated unless the new owner visits an authorized Mercedes-Benz dealership to reactivate the system.

Overview of the emergency call system

eCall can help to reduce the time between an accident and the arrival of emergency services at the site of the accident. It helps locate an accident site in places that are difficult to access. However, even if a vehicle is equipped with eCall, this does not mean the system is ON. As such, eCall does not replace dialing 911 in the event of an accident.

An emergency call can be made automatically (→ page 235) or manually (→ page 236). Only make emergency calls if you or others are in need of rescue. Do not make an emergency call in the event of a breakdown or a similar situation.

Message in the media display:
SOS NOT READY: the vehicle is not on or eCall not available.

During an active emergency call, SOS appears in the display.

You can find more information on the regional availability of eCall at: https://www.mercedes-benz-mobile.com/extra/ecall/

If there is a malfunction of the emergency call system, the speakers, microphone, air bag or the SOS button, for example, are faulty.

You can recognize a malfunction in the emergency call system by the following displays:

- The red SOS NOT READY message appears in the display of the instrument cluster or in the media display.
- The SOS button lights up red continuously.

Triggering an automatic emergency call

Requirements:
- The vehicle is switched on.
- The starter battery is sufficiently charged.

If restraint systems such as air bags or Emergency Tensioning Devices have been activated after an accident, eCall may automatically initiate an emergency call.

When the emergency call is made:

- A voice connection is made to the Mercedes-Benz emergency call center.
- A message with accident data is transmitted to the Mercedes-Benz emergency call center.

The Mercedes-Benz emergency call center can transmit the vehicle position data to one of the emergency call centers.

The SOS button in the overhead control panel flashes until the emergency call is finished.

It is not possible to immediately end an automatic emergency call.

If no connection can be made to the emergency services either, a corresponding message appears in the media display.

▶ Dial the local emergency number on your mobile phone.

If an emergency call has been initiated:

- Remain in the vehicle if the road and traffic conditions permit you to do so until a voice

connection is established with the emergency call center operator.

- Based on the call, the operator decides whether it is necessary to call rescue teams and/or the police to the accident site.
- If no vehicle occupant answers, an ambulance is sent to the vehicle immediately.

Triggering a manual emergency call

▶ **Via the SOS button in the overhead control panel:** press the SOS button for at least one second.

▶ **Via voice control:** use the MBUX Voice Assistant voice command **Call the Mercedes accident center**.

When the emergency call is made:

- A voice connection is made to the Mercedes-Benz emergency call center.
- A message with accident data is transmitted to the Mercedes-Benz emergency call center.

  The Mercedes-Benz emergency call center can transmit the vehicle position data to one of the emergency call centers.
- Remain in the vehicle if the road and traffic conditions permit you to do so until a voice connection is established with the emergency call center operator.
- Based on the call, the operator decides whether it is necessary to call rescue teams and/or the police to the accident site.

If no connection can be made to the public emergency services, a corresponding message appears in the display.

▶ Dial the local emergency number on your mobile phone.

Transmitted data with the emergency call

Data transmitted by the eCall includes but is not limited to:

- Vehicle's GPS position data
- GPS position data on the route (a few () hundred meters before the incident)
- Direction of travel
- Vehicle identification number
- Vehicle drive type
- Estimated number of people in the vehicle
- Whether the emergency call was initiated manually or automatically
- Time of the accident
- Language setting on the multimedia system

Data transmitted is vehicle information. For any questions about the collection, use and sharing of the eCall system data, please contact MBUSA's Customer Assistance Center at 800-FOR-MERC.

For Canada, please contact MBC's Customer Assistance Center at 1-800-387-0100.

Customer requests for covered information should be submitted via the same channels.

For accident clarification purposes, the following measures can be taken up to an hour after the emergency call has been initiated:

- The current vehicle position can be determined
- A voice connection to the vehicle occupants can be established

Function of the emergency call system self-diagnosis

Your car verifies the operability of the emergency call system each time the ignition is ON.

In the event of a system malfunction, you will be informed by the following signals:

- The SOS NOT READY message in the instrument cluster display or the red SOS NOT READY message on the media display, if available
- The flashing indicator lamp in the overhead control panel

Please, make sure, that during 30 seconds after switching ignition ON the red indicator SOS NOT READY in the upper right corner of the multimedia display is switched OFF, this means the emergency call system passed diagnostics successfully.

Flat tire

Notes on a flat tire

⚠ **WARNING** Risk of accident due to a flat tire

A flat tire strongly impairs the vehicle's driving characteristics, as well as its steering and braking characteristics.

▶ Do not drive with a flat tire.

▶ Replace the flat tire with the spare wheel. Alternatively, consult a qualified specialist workshop.

In the event of a flat tire, the following options are available depending on your vehicle's equipment:

- You can make a breakdown assistance call using the breakdown assistance call button in the overhead control panel (→ page 192).
- Change the wheel (→ page 268).

Battery

Notes on the starter battery

⚠ **WARNING** Risk of a fire due to work carried out incorrectly on the battery

The battery clamps may be live even after they have been disconnected. This can result in a short circuit.

▶ Always have work on the batteries carried out at a qualified specialist workshop.

▶ Never disconnect the battery yourself.

⚠ **WARNING** Risk of an accident due to work carried out incorrectly on the battery

Work carried out incorrectly on the battery can, for example, lead to a short circuit. This can restrict functions relevant for safety systems and impair the operating safety of your vehicle.

You could lose control of the vehicle in the following situations in particular:

- When braking
- In the event of abrupt steering maneuvers and/or when the vehicle's speed is not adapted to the road conditions

▶ In the event of a short circuit or a similar incident, contact a qualified specialist workshop immediately.

▶ Do not drive on.

▶ Always have work on the battery carried out at a qualified specialist workshop.

- Further information on ABS (→ page 147)
- Further information on ESP®(→ page 148)

Mercedes-Benz recommends that you have the starter battery replaced at a qualified specialist workshop, e.g. a Mercedes-Benz service center.

If you want to replace the battery yourself, observe the following information:

- Only replace a faulty battery with a battery which fulfills the vehicle's specific requirements.
- Take detachable parts such as, e.g the vent hose or terminal cover from the battery which is to be replaced.
- Make sure that the vent hose is always connected to its original opening on the battery side.

  Install the existing or newly supplied stop plugs.

  Otherwise, gases or battery acid could escape.
- Make sure that the detachable parts are connected in the same way as before.

For safety reasons, Mercedes-Benz recommends that you only use batteries which have been approved for your vehicle by Mercedes-Benz. These batteries provide increased impact protection to prevent vehicle occupants from suffering acid burns should the battery be damaged in an accident.

⚠ **WARNING** Risk of explosion due to electrostatic charge

Electrostatic charge can ignite the highly explosive gas mixture in the battery.

▶ To discharge any electrostatic charge that may have built up, touch the metal vehicle body before handling the battery.

The highly flammable gas mixture is created while the battery is charging and when jump-starting.

⚠ **WARNING** Danger of chemical burns from the battery acid

Battery acid is caustic.

▶ Avoid contact with the skin, eyes or clothing.

▶ Do not lean over the battery.

▶ Do not inhale battery gases.

▶ Keep children away from the battery.

▶ Immediately rinse battery acid off thoroughly with plenty of clean water and seek medical attention immediately.

ENVIRONMENTAL NOTE Environmental damage due to improper disposal of batteries

Batteries contain pollutants. It is illegal to dispose of them with the household rubbish.

▶ Dispose of batteries in an environmentally responsible manner. Take discharged batteries to a qualified specialist workshop or to a collection point for used batteries.

Consult a qualified specialist workshop to connect the battery.

Observe the safety notes and protective measures when handling batteries.

Risk of explosion

Fire, open flames and smoking are prohibited when handling the battery. Avoid creating sparks.

Electrolyte or battery acid is caustic. Avoid contact with the skin, eyes and clothing. Wear suitable protective clothing, in particular gloves, apron and safety mask. Immediately rinse electrolyte or acid splashes off with clean water. If necessary, seek medical advice.

Wear eye protection.

Keep children at a safe distance.

Observe this Operator's Manual.

If you do not use the vehicle for a long period or drive short distances regularly:

- Connect the battery to a charger recommended for Mercedes-Benz.
- Consult a qualified specialist workshop (⟶ page 125) to disconnect the battery.

Starting assistance and charging the starter battery

▶ Always use the jump-start connection in the engine compartment for starting assistance and when charging the battery.

NOTE Damage to the battery due to overvoltage

When charging using a battery charger without a maximum charging voltage, the battery or the on-board electronics may be damaged.

▶ Only use battery chargers with a maximum charging voltage of 14.4 V.

NOTE Damage to the exhaust system due to prolonged idling operation to charge the battery

Prolonged idling operation can lead to irreparable damage to the exhaust system components.

▶ Do not charge the battery by leaving it idling for long periods.

WARNING Risk of explosion due to igniting hydrogen gas

If you cause a short circuit or sparks occur, the hydrogen gas may ignite when a battery is charging.

▶ Ensure that the positive terminal of a connected battery does not come into contact with vehicle parts.

▶ Never place metal objects or tools on a battery.

▶ When connecting and disconnecting the battery, always observe the sequence of battery terminals described.

▶ When jump starting, take care to connect only battery terminals of identical polarity.

- When jump starting, always observe the sequence described for connecting and disconnecting the jumper cables.
- Do not connect or disconnect the battery terminals when the engine is running.

WARNING Risk of explosion due to a mixture of explosive gases

A mixture of explosive gases can escape from the battery during charging and jump starting.

- Fire, open flames, smoking and creating sparks must be avoided.
- Make sure that there is sufficient ventilation.
- Do not stand over the battery.

WARNING Risk of explosion from a frozen battery

A discharged battery may freeze at temperatures slightly above or below freezing point.

During starting assistance or battery charging, battery gas can be released.

- Always allow a battery to thaw before charging it or performing starting assistance.

If the warning/indicator lamps do not light up in the instrument cluster at temperatures around or below freezing, it is highly probable that the discharged battery has frozen.

In this case, observe the following points:

- Do not give the vehicle starting assistance or charge the battery.
- The service life of a battery that has been thawed may be reduced drastically.
- The starting behavior may deteriorate, particularly at low temperatures.
- It is recommended that you have a thawed battery checked at a qualified specialist workshop.

NOTE Damage caused by numerous or extended attempts to start the engine

Numerous or extended attempts to start the engine may damage the catalytic converter due to non-combusted fuel.

- Avoid numerous and extended attempts to start the engine.

When jump-starting and charging the batteries, observe the following points:

- Only use undamaged jumper cables/charging cables with a sufficient cross-section and insulated terminal clamps.
- Non-insulated parts of the terminal clamps must not come into contact with other metal parts while the jumper cables/charging cables are connected to the battery/jump-start connection point.
- The jumper cables/charging cables must not come into contact with any parts which may move when the engine is running.
- Make sure that neither you nor the battery is electrostatically charged.
- Avoid fire and naked flames.
- Do not lean over a battery.
- **When charging:** only use a battery charger that has been tested and approved by Mercedes-Benz and read the operating instructions for your charger before charging the batteries.

Observe the additional following points during starting assistance:

- Starting assistance may only be provided using batteries with a nominal voltage of 12 V.
- The vehicles must not touch each other.
- **Vehicles with gasoline engine:** only perform starting assistance when the engine and exhaust system are cold.

- **Vehicles with a battery main switch:** check whether the battery main switch is inserted(→ page 125).
- Use the parking brake to secure the vehicle.
- **Vehicles with automatic transmission:** shift the transmission to position P.
- Shift to neutral.
- Switch off the vehicle and all electrical consumers.
- Open the hood (→ page 220).

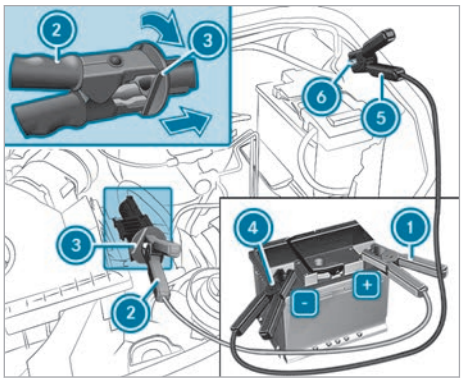

ⓘ **Right-hand drive vehicle:** the jump-start connection may be on the opposite side.

- Remove the cover from the POSITIVE terminal of the donor battery.
- First connect red POSITIVE terminal clamp ① from the starting assistance/charging cable to the POSITIVE terminal of the donor battery.
- Using second red POSITIVE terminal clamp ② of the starting assistance/charging cable, slide red cover cap on jump-start connection ③ back with a clockwise turn.
- Attach second red POSITIVE terminal clamp ② to the POSITIVE terminal of jump-start connection ③.
- **For starting assistance:** start the engine of the donor vehicle and let it run at idle speed.
- First connect black NEGATIVE terminal clamp ④ of the starting assistance/charging cable to the NEGATIVE terminal of the donor battery.
- Connect second black NEGATIVE terminal clamp ⑤ of the starting assistance/charging cable to ground point ⑥ on your own vehicle (bare metal part in the engine compartment).
- **For starting assistance:** start the vehicle.
- **For charging:** start the charging process.
- **For starting assistance:** let the engine run for a few minutes.
- **For starting assistance:** before disconnecting the jumper cable, switch on an electrical consumer on your own vehicle, e.g. the rear window heater or lighting.

When the starting assistance/charging process is complete:

- Remove the terminal clamps of the starting assistance/charging cable in reverse order. First remove second black NEGATIVE terminal clamp ⑤ from ground point ⑥ in the engine compartment. Then remove black NEGATIVE terminal clamp ④ from the donor battery. Then remove second red POSITIVE terminal clamp ② from the POSITIVE terminal of jump-start connection ③. Then remove red POSITIVE terminal clamp ① from the donor battery.
  The red cover cap springs back to its initial position when second red POSITIVE terminal clamp ② is disconnected from jump-start connection ③.

You can obtain further information at a qualified specialist workshop.

Installing and removing the floor covering

⚠ **WARNING** Risk of accident due to objects in the driver's footwell

Objects in the driver's footwell may impede pedal travel or block a depressed pedal.

This will jeopardize the operating and road safety of the vehicle.

- Stow all objects in the vehicle securely so that they cannot get into the driver's footwell.
- Make sure that there is always sufficient clearance for the pedals.
- Ensure there are non-slip attachments for floor mats and carpets.
- Do not lay multiple floor mats or carpets on top of one another.

Requirements:
- All electrical consumers are switched off.

Removal

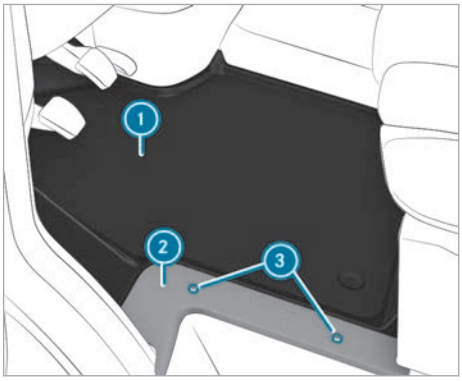

- Unscrew screws 3 and remove trim 2.
- Remove floor covering 1.

Installation

- Insert floor covering 1 and align it at the base of the driver's seat and at the door sill.
- Put trim 2 in place and screw screws 3 back in.

Disconnecting the starter battery

NOTE Damage to electrical major assembly due to disconnecting incorrectly

Electrical major assemblies could be damaged if the starter battery is disconnected while the vehicle is running.

- Switch off the vehicle. Then, release the battery clamps of the starter battery.
- Always disconnect the starter battery in the battery case in the left footwell first. Otherwise, electrical major assemblies, e.g. the alternator, could be damaged.

NOTE Damage to the on-board electronics due to disconnecting incorrectly

If the starter battery is not disconnected as described below, the on-board electronics may be damaged.

- Always disconnect the starter battery as described in the following sequence. Never reverse the battery terminals. Otherwise the on-board electronics may be damaged.

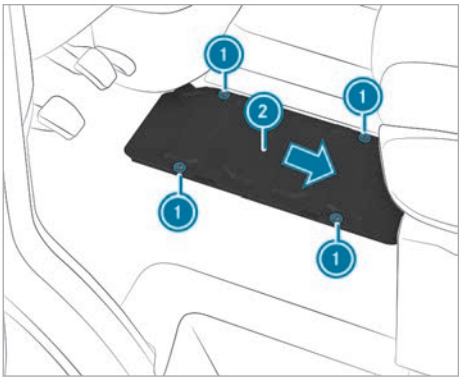

ⓘ If the vehicle is expected to be idle or stored for more than 4 weeks, observe the notes on temporarily storing the vehicle (→ page 144) and on standby mode (→ page 145).

- **Vehicles with a battery main switch:** disconnect the main switch of the battery (→ page 126).
- **Vehicles without a battery main switch:** switch off all electrical consumers.
- Switch off the vehicle.
- Remove the floor covering (→ page 240).
- Remove screws 1 and slide battery cover 2 in the direction of the arrow.
  The screws must protrude over the larger recesses.
- Pull up battery cover 2.

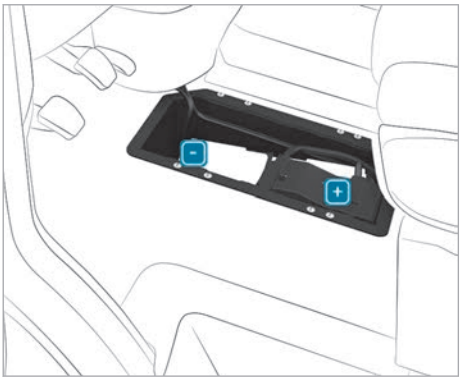

- First loosen and remove the NEGATIVE terminal clamp on the battery so that the clamp is no longer in contact with the terminal.
- Remove the clamp cover of the POSITIVE terminal.
- Loosen the POSITIVE terminal clamp and flip it up to the side, together with the prefuse box.

Towing or tow-starting

Permissible towing methods

In the event of a breakdown, Mercedes-Benz recommends that you have the vehicle transported instead of towed.

NOTE Damage to the vehicle due to towing away incorrectly

- Observe the instructions and notes on towing away.

Vehicles with automatic transmission and rear-wheel drive: if there is a malfunction, the automatic transmission may be locked in position P.
If the automatic transmission cannot be shifted to position N, transport the vehicle (→ page 244). A tow truck with lifting equipment is required to transport the vehicle.

Permissible towing methods

	Both axles on the ground	Front axle raised	Rear axle raised
Vehicles with automatic transmission and rear-wheel drive	Yes, no further than 31 miles (50 km) at 31 mph (50 km/h)	Yes, no further than 31 miles (50 km) at 31 mph (50 km/h)	Yes, if the steering wheel is immobilized in the center position with a steering wheel lock
Vehicles with all-wheel drive	Yes, no further than 31 miles (50 km) at 31 mph (50 km/h)	No	No

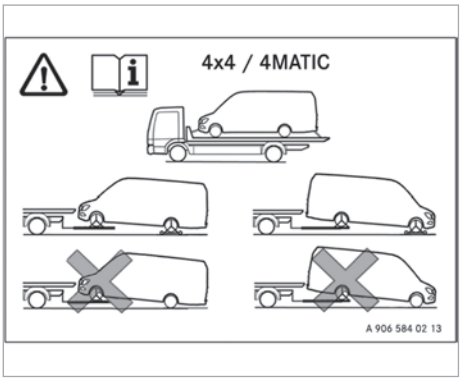

Vehicles with all-wheel drive: warning notice on the B-pillar on the driver's side

Towing with a raised axle: towing should be done by a towing company.

Towing the vehicle with both axles on the ground

- Observe the notes on permissible towing methods (→ page 242).
- Make sure that the battery is connected and charged.

When the battery is discharged, the following situations occur:

- The vehicle does not start.
- It is not possible to release or apply the electric parking brake.
- **Vehicles with automatic transmission:** the automatic transmission cannot be shifted to position N or P.

NOTE Damage due to towing away at excessively high speeds or over long distances

The drivetrain could be damaged when towing at excessively high speeds or over long distances.

- A towing speed of 30 mph (50 km/h) must not be exceeded.
- A towing distance of 30 miles (50 km) must not be exceeded.

Vehicles with automatic transmission and rear passenger compartment-wheel drive: if there is a malfunction, the automatic transmission may be locked in position P.
If the automatic transmission cannot be shifted to position N, transport the vehicle (→ page 244). A tow truck with lifting equipment is required to transport the vehicle.

WARNING Risk of accident when towing a vehicle which is too heavy

If the vehicle to be tow-started or towed away is heavier than the permissible gross mass of your vehicle, the following situations can occur:

- The towing eye may become detached.
- The vehicle/trailer combination may swerve or rollover.

- Before tow-starting or towing away, check if the vehicle to be tow-started or towed away exceeds the permissible gross mass.

If a vehicle is towed or tow-started, its weight should not be greater than the permissible gross mass of the towing vehicle.

- Information on the vehicle's permissible gross mass can be found on the vehicle identification plate (→ page 280).
- **Vehicles with automatic transmission:** do not open the driver's or co-driver door. Otherwise, the automatic transmission automatically shifts to position P.
- install the towing eye (→ page 245).
- Secure the towing device.

NOTE Damage due to incorrect connection of the tow bar

- Only connect the tow rope or tow bar to the towing eyes.

You can also secure the towing device to the trailer hitch.

NOTE Damage and risk of accident when towing with a tow rope

There is a risk of an accident if you do not observe safety and protective measures when towing using a tow rope.

Observe the following points when towing with a tow rope:

- Secure the tow rope on the same side on both vehicles.
- Make sure the tow rope does not exceed the legally prescribed length.
- Mark the tow rope in the center, e.g. with a white cloth (30 x 30 cm). This will make other road users aware that a vehicle is being towed.
- Observe the brake lamps of the towing vehicle while driving. Always maintain a distance that ensures the tow rope does not sag.
- Do not use steel cables or chains to tow your vehicle. Otherwise, you could damage the vehicle.

- Deactivate automatic locking (→ page 52).
- Do not activate the HOLD function.
- Deactivate tow-away alarm (→ page 66).
- Deactivate Active Brake Assist (→ page 151).
- **Vehicles with automatic transmission:** Shift the automatic transmission to N.
- Release the parking brake.

WARNING Risk of accident due to limited safety-related functions during the towing process

Safety-related functions are limited or no longer available in the following situations:

- The vehicle is switched off.
- The brake system or power steering system is malfunctioning.
- The energy supply or the on-board electrical system is malfunctioning.

When your vehicle is towed away, significantly more effort may be required to steer and brake than is normally required.

▶ Use a tow bar.

▶ Make sure that the steering wheel can move freely before towing the vehicle away.

NOTE Damage due to excessive tractive power

If you pull away sharply, the tractive power may be too high and the vehicles could be damaged.

▶ Pull away slowly and smoothly.

Towing a vehicle with the front or rear passenger compartment axle raised

NOTE Damage if the vehicle is switched on

If you leave the vehicle switched on while towing it with the front or rear axle raised, an intervention by ESP® can damage the brake system.

▶ Switch off the vehicle.

NOTE Damage due to incorrect removal or installation of the propeller shafts

When installing the propeller shafts, they can be damaged if you do not use new screws.

Always use new screws when installing the propeller shafts.

Only have the propeller shafts installed or removed by qualified, skilled personnel.

ⓘ If the front axle is damaged, raise the vehicle at the front, and if the rear passenger compartment axle is damaged, raise the vehicle at the rear passenger compartment.

ⓘ **Vehicles with automatic transmission and rear passenger compartment-wheel drive:** if there is a malfunction, the automatic transmission may be locked in position P.
If the automatic transmission cannot be shifted to position N, transport the vehicle (→ page 244). A tow truck with lifting equipment is required to transport the vehicle.

▶ Observe the notes on permissible towing methods (→ page 242).

▶ Remove the propeller shafts to the drive axles if the maximum permissible towing distance is exceeded.

▶ Only have the propeller shafts installed or removed by qualified, trained personnel.

▶ **Vehicles with automatic transmission:** Shift the automatic transmission to N.

▶ Release the parking brake.

▶ Switch off the vehicle.

Loading the vehicle for transport

▶ Observe the notes on permissible towing methods (→ page 242).

▶ Connect the towing device to the towing eye to load the vehicle.

▶ **Vehicles with automatic transmission:** shift the automatic transmission to position N.

ⓘ **Vehicles with automatic transmission:** in the event of damage to the electrics, the automatic transmission may be locked in position P. To shift to position N, provide the on-board electrical system with power (→ page 238).

▶ Load up the vehicle.

▶ **Vehicles with automatic transmission:** shift the automatic transmission to position P.

▶ Use the parking brake to secure the vehicle against rolling away.

▶ Only secure the vehicle by the wheels.

Vehicles with all-wheel drive/vehicles with automatic transmission

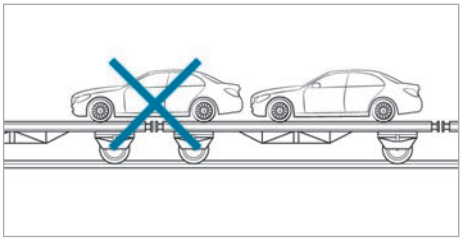

▶ Make sure that the front and rear passenger compartment axles come to rest on the same transportation vehicle.

! NOTE Damage to the drive train due to incorrect positioning of the vehicle

▶ Do not position the vehicle above the connection point of the transport vehicle.

Towing eye storage location

The towing eye is located in the vehicle tool kit in the front passenger footwell (⟶ page 247).

installing/removing the towing eye

installing the front towing eye

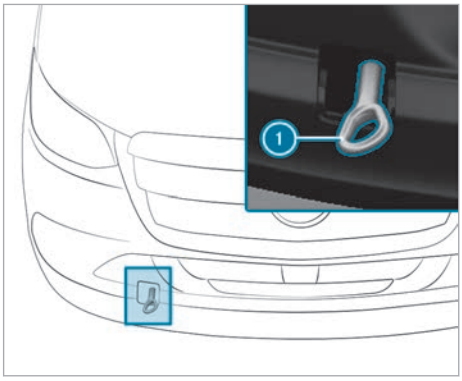

▶ Press on the top of the cover and remove the cover.

▶ Screw in the towing eye ① clockwise as far as it will go and tighten.

Removing the front towing eye

▶ Unscrew the towing eye ① counter-clockwise.

▶ Insert the cover with the tabs at the top and push in at the bottom until the cover engages.

Rear towing eye

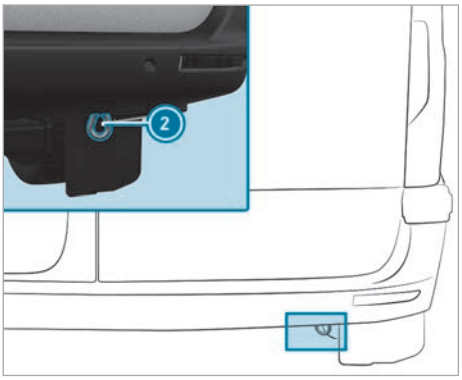

Rear towing eye

ⓘ The rear towing eye ② is permanently attached to the vehicle.

! NOTE Damage to the vehicle as a result of incorrect use of the towing eye or trailer hitch

The vehicle may sustain damage if the towing eye is used to haul the vehicle out of a ditch during recovery.

▶ Use the towing eye exclusively for towing the vehicle.

▶ Never use the towing eye to haul the vehicle out of a ditch during recovery.

Tow-starting the vehicle

! NOTE Damage to the automatic transmission due to tow starting

The automatic transmission may be damaged in the process of tow starting vehicles with automatic transmission.

▶ Vehicles with automatic transmission must not be tow started.

Electrical fuses

Notes on electrical fuses

WARNING Risk of accident and injury due to overloaded lines

If you manipulate or bridge a faulty fuse or if you replace it with a fuse with a higher amperage, the electric line could be overloaded.

This could result in a fire.

- Always replace faulty fuses with specified new fuses containing the correct amperage.

NOTE Damage due to incorrect fuses

Electrical components or systems could be damaged by incorrect fuses.

- Only use fuses which have been approved by Mercedes-Benz and which have the correct fuse rating.

The electrical fuses in your vehicle isolate defective circuits. If a fuse blows, all the components on the circuit and their functions will cease to operate.

Blown fuses must be replaced with fuses of an equivalent specification, which you can determine by the color and fuse rating. The fuse allocation chart and further information on the electric fuses and relays can be found in the "Fuse allocation chart" supplement.

NOTE Damage or malfunctions caused by moisture

Moisture may cause damage to the electrical system or cause it to malfunction.

- When the fuse box is open, make sure that no moisture can enter the fuse box.
- When closing the fuse box, make sure that the seal of the lid is positioned correctly on the fuse box.

If the new fuse which has been inserted also blows, have the cause traced and rectified at a qualified specialist workshop.

Make sure of the following before replacing a fuse:

- The vehicle is secured such that it does not roll away.
- All electrical consumers are switched off.
- The vehicle is switched off.

The fuses are located in various fuse boxes:

- Fuse box in the co-driver footwell (→ page 246)
- Fuse box in the seat base of the driver's seat (→ page 246)

Opening the fuse box in the seat base of the driver's seat

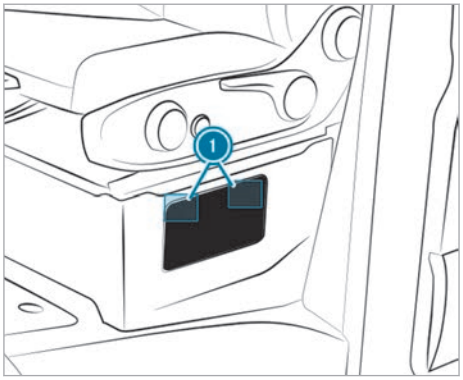

- **To open:** press down and unclip fasteners (1) on the cover.
- Remove the cover.
- **To close:** press the cover firmly into the seat base until fasteners (1) clip in.

Opening and closing the fuse box in the front passenger's footwell

Opening the fuse box

The fuse box is under the vehicle toolkit in the stowage compartment of the front passenger's footwell.

- Unlocking and removing the stowage compartment cover in the front passenger's footwell (→ page 247).

Example: vehicle tool kit insert

- Lift the insert at marked positions 1.
- Pull the insert out of clips 2.

Closing the fuse box

- Slide the insert into clips 2.
- Close the insert by pressing on marked positions 1.
- Position the stowage compartment cover in the front passenger's footwell and lock it (→ page 247).

Vehicle tool kit

Information on the vehicle tool kit

The vehicle tool kit is located in the stowage compartment in the footwell on the front passenger side (→ page 247).

The vehicle tool kit contains:

- a towing eye
- a screwdriver with Torx®, Phillips and slotted heads

The vehicle tool kit may also contain the following, for example:

- an open-end wrench
- a wheel wrench
- a release tool for the parking pawl
- an insert bit
- a socket wrench
- tool for unlocking the lockable DEF® filler cap

Unlocking and removing the stowage compartment cover

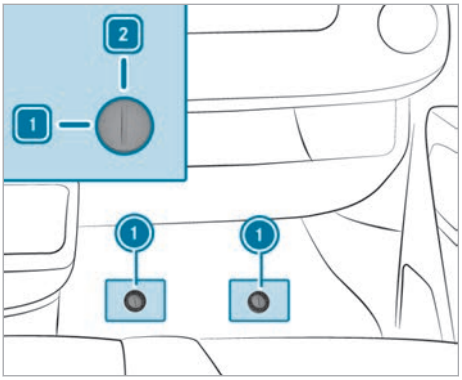

- Remove the rubber mat from the co-driver's footwell.
- **To unlock:** turn quick-release fastener 1 counter-clockwise to position 1.
- Slightly raise and pull out the cover.

Inserting and locking the cover

- Slide in the cover and press it downwards.
- Press down quick-release fastener 1 until it engages.
- **To lock:** turn quick-release fastener 1 clockwise to position 2.

Removing the vehicle tool kit

Example: vehicle tool kit insert

- Lift the insert at marked positions 1.
- Pull the insert out of clips 2.

Storing the vehicle tool kit

- Slide the insert into clips ②.
- Close the insert by pressing on marked positions ①.

Hydraulic jack

Information on the hydraulic jack

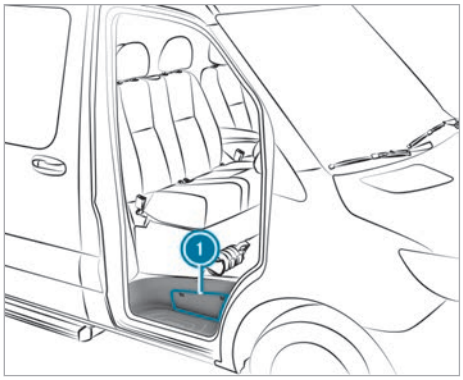

The hydraulic jack is located in side compartment ① above the co-driver door step.

Vehicles with more than 18 seats

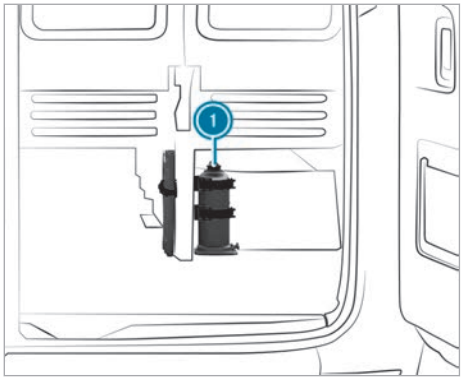

Hydraulic jack ① is located behind the last bench seat on the right.

The jack has a maximum weight of 16.5 lbs (7.5 kg) depending on the vehicle's equipment. You will find the maximum load capacity of the jack stated on the adhesive label attached to the jack. If there is a malfunction, please contact a qualified specialist workshop.

Jack maintenance:

- Clean and grease all moving parts after use.
- Extend and retract the pistons fully every six months.

Removing the pump lever rod and the jack

Requirements:

- The co-driver door is open.

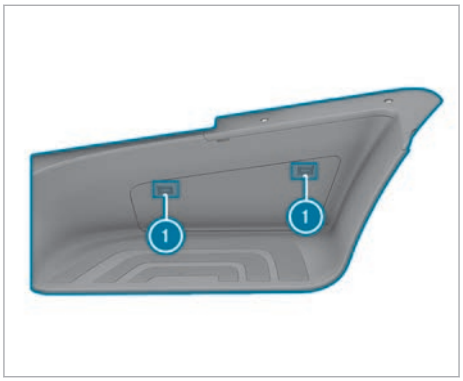

- **To open:** press down and unclip fasteners ① on the cover.
- Remove the cover.
- Pull out the holder completely and place it on the step.

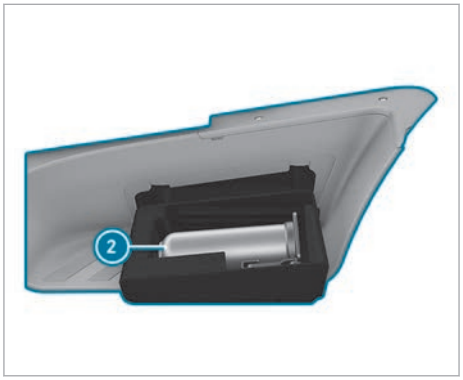

- Remove jack ② and the pump lever rod.
- **To close:** press the cover firmly so that fasteners ① engage.

Vehicles with more than 18 seats
Requirement:

- The right-hand rear-end door is open.

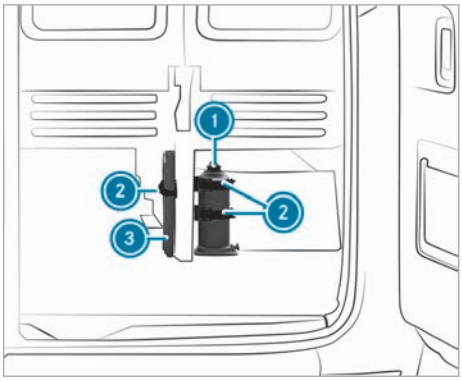

▶ Open clasps ② on jack ①, loosen the straps and remove the jack.

▶ Open clasp ② on pump lever rod ③, loosen the straps and remove the pump lever rod.

▶ To stow: collapse pump lever rod ③ and place it along with jack ① in the loosened straps, and tighten clasps ② to close.

Information on noise or unusual driving characteristics

While driving, pay attention to vibrations, noises and unusual driving characteristics, e.g. pulling to one side. This may indicate damage to the wheels or tires. If you suspect that a tire is defective, reduce your speed. Stop the vehicle as soon as possible to check if wheels and tires have been damaged or are no longer functioning properly. Hidden tire damage could also be causing the unusual driving characteristics. If no signs of damage can be detected, have the tires and wheels checked at a qualified specialist workshop.

Notes on regularly inspecting wheels and tires

WARNING Risk of injury through damaged tires

Damaged tires can cause tire pressure loss.

▶ Check the tires regularly for signs of damage and replace any damaged tires immediately.

Check the wheels and tires of your vehicle for damage regularly, i.e. at least every two weeks, as well as after driving off-road or on rough roads. Damaged wheels can lead to a loss of tire pressure.

Look out for the following types of damage, for example:

- cuts in the tires
- punctures in the tires
- tears in the tires
- bulges on tires
- deformation or severe corrosion on wheels

WARNING Risk of hydroplaning due to insufficient tire tread

Insufficient tire tread will result in reduced tire grip.

▶ Thus, you should regularly check the tread depth and the condition of the tread across the entire width of all tires.

Minimum tread depth for:

- Summer tires: ⅛ in (3 mm)
- M+S tires: ⅙ in (4 mm)

▶ For safety reasons, replace the tires before the legally prescribed limit for the minimum tread depth is reached.

Conduct the following checks regularly on all wheels, at least once a month or as required, e.g. before a long journey or when driving off-road:

- Check the tire pressure (→ page 252)
- Check the valve caps

  The valves must be protected against moisture and dirt by the valve caps approved especially for your vehicle by Mercedes-Benz .
- Visually inspect the tread depth and the tire tread across the whole tire width

  The minimum tire tread depth for summer use is ⅛ in (3 mm) and for winter use ⅙ in (4 mm).

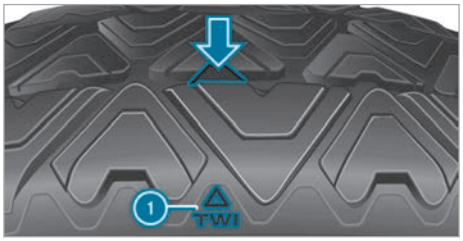

Markings ① show in which places the bar indicators (arrow) are integrated into the tire tread. They are visible as soon as the tread depth is approximately 1⁄16 in (1.6 mm).

Information on driving with summer tires

Summer tires significantly lose elasticity and therefore traction and braking power at temperatures below 50 °F (10 °C). Change the tires on your vehicle to M+S tires. Using summer tires at very cold temperatures could cause tears to form, thereby damaging the tires permanently. Mercedes-Benz cannot accept responsibility for this type of damage.

Always observe the maximum permissible speed specified for the summer tires you have installed (→ page 263).

Once you have installed the summer tires:

- Restart the tire pressure monitoring system (→ page 258)
- Check the tire pressure (→ page 252)

Information on M+S tires

⚠ **WARNING** Risk of an accident due to insufficient tire tread

M+S tires with a tread depth of less than 1/6 in (4 mm) are not suitable for use in winter and do not provide sufficient grip.

▶ M+S tires with a tread depth of less than 1/6 in (4 mm) must be replaced immediately.

At temperatures below 50 °F (10 °C) use winter tires or all-season tires marked M+S.

Only winter tires bearing the snowflake symbol in addition to the M+S marking provide the best possible grip in wintry road conditions.

Only these tires allow driving safety systems, e..g. ABS and ESP® to function optimally also in winter. These tires have been developed specifically for driving in snow.

Use M+S tires of the same make and tread on all wheels to maintain safe handling characteristics.

Observe the maximum permissible speed specified for the M+S tires you have installed (→ page 263).

If you install M+S tires that have a lower maximum permissible speed than the maximum design speed of the vehicle, affix an appropriate information label in the driver's field of vision. You can obtain this at a qualified specialist workshop.

Once you have installed the M+S tires, take the following measures:

- Restart the tire pressure monitoring system (→ page 258)
- Check the tire pressure (→ page 257)

Notes on snow chains

⚠ **WARNING** Risk of accident due to incorrectly installed snow chains

Vehicles with rear-wheel drive: if you have installed snow chains to the front wheels, they may drag against the vehicle body or chassis components.

▶ Never install snow chains on the front wheels.

▶ Only install snow chains on the rear wheels in pairs.

▶ **Vehicles with twin tires:** install the snow chains on the outer wheels.

⚠ **WARNING** Risk of accident due to unsuitable snow chains

Commercially available snow chains can come loose and damage chassis components or brake hoses.

▶ Only install snow chains that have been approved by Mercedes-Benz for these tires.

For safety reasons, Mercedes-Benz recommends that you only use snow chains that have been tested and approved. You can obtain information about snow chains from any qualified specialist workshop.

⚠ **WARNING** Risk of accident due to snow chains breaking

If you drive too fast with snow chains, they can break, injure other persons, and damage the vehicle.

▶ Observe the maximum permissible speed for operation with snow chains.

! **NOTE** Damage to the wheel trim from mounted snow chains

If snow chains are mounted to steel wheels, the wheel trims can be damaged.

▶ Remove the wheel trims of steel wheels before mounting snow chains.

Observe the following notes when using snow chains:

- Snow chains are only permissible for certain wheel/tire combinations. You can obtain information on this matter at a qualified specialist workshop.
- For safety reasons, only use snow chains that have been specifically approved for your vehicle by Mercedes-Benz, or snow chains with the same quality standard.
- The snow chains must be retightened after driving approximately 0.6 miles (1 km). This is the only way to ensure the snow chains are optimally fitted with clearance to adjacent components.
- **Vehicles with all-wheel drive:** fit snow chains on the wheels on the rear axle. On vehicles with twin tires, fit the snow chains on the outer wheels. Observe the manufacturer's installation instructions.

- Use snow chains only when the road surface is completely snow-covered. Remove the snow chains as soon as possible when you come to a road that is not snow-covered.
- Local regulations may restrict the use of snow chains. Observe the applicable regulations before fitting snow chains.
- If snow chains are fitted, the maximum permissible speed is 30 mph (50 km/h).
- **Vehicles with Parking Assist:** do not use Parking Assist PARKTRONIC when snow chains are fitted.

Tire pressure

Notes on tire pressure

WARNING Risk of an accident due to tire pressure that is too low or too high

Tires with pressure that is too high or too low pose the following dangers:

- The tires can burst.
- The tires can wear excessively and/or unevenly.
- The driving characteristics as well as the steering- and braking may be greatly impaired.

▶ Observe the recommended tire pressure and check the tire pressure of all tires including the spare wheel:

- monthly
- when the load changes
- before leaving on a longer journey
- when the operating conditions change, e.g. off-road driving
- when driving at over 155 mph (250 km/h)

▶ Adjust the tire pressure if necessary.

Driving with tire pressure that is too high or too low can:

- shorten the service life of the tires.
- contribute to tire damage.
- adversely affect driving characteristics and thus driving safety, e.g. due to hydroplaning.

WARNING Risk of accident due to too low a tire pressure

Tires with pressure that is too low can overheat and burst as a consequence.

In addition, they also suffer from irregular wear, which can significantly impair the braking properties and the handling characteristics.

▶ Avoid excessively low tire pressure.

Tire pressure that is too low can result in:

- tire defects as a result of overheating
- impaired handling characteristics
- uneven wear
- increased fuel consumption

WARNING Risk of accident due to too high a tire pressure

Tires with excessively high pressure can burst.

In addition, they also suffer from irregular wear, which can significantly impair the braking properties and the handling characteristics.

▶ Avoid excessively high tire pressures.

Tire pressure that is too high can result in:

- increased braking distance
- impaired handling characteristics
- uneven wear
- impaired driving comfort
- susceptibility to damage

WARNING Risk of accident due to repeated pressure drop in the tires

The wheels, valves or tires could be damaged.

Too low a tire pressure can lead to the tires bursting.

▶ Examine the tires for foreign objects.

▶ Check whether the tire has a puncture or the valve has a leak.

▶ If you are unable to rectify the damage, contact a qualified specialist workshop.

You can find information on recommended tire pressure for the vehicle's factory-installed tires on the following labels:

- Tire and loading information and tire pressure table on the B-pillar of your vehicle (→ page 259).

Please also note the maximum tire pressure (→ page 263).

Use a suitable pressure gauge to check the tire pressure. The outward appearance of a tire does not allow any reliable conclusion about the tire pressure.

ENVIRONMENTAL NOTE Environmental damage due to insufficient or excessive tire pressure

Overinflating or underinflating your tires will shorten their service life.

▶ Check the tire pressure regularly, but at least every 14 days.

Vehicles with a tire pressure monitoring system: you can also check the tire pressure via the instrument cluster (→ page 257).

Only check tire pressure when the tires are cold. Conditions for cold tires:

- The vehicle has been parked with the tires out of direct sunlight for at least three hours.
- The vehicle has traveled less than 1 mile (1.6 km).

A rise in the tire temperature of 18°F (10°C) increases the tire pressure by approx. 10 kPa (0.1 bar/1.5 psi). Take this into account when checking the tire pressure of warm tires.

The tire pressure recommended for increased load/speed in the tire pressure table may affect the ride comfort.

WARNING Risk of accident due to unsuitable accessories on tire valves

If you mount unsuitable accessories onto tire valves, the tire valves may be overloaded and malfunction, which can cause tire pressure loss.

▶ Only screw standard valve caps or valve caps specifically approved by Mercedes-Benz for your vehicle onto the tire valve.

Notes on trailer operation

The applicable tire pressure for the tires of the rear axle is always the tire pressure recommended in the tire pressure table for a full load.

Overview of the tire pressure table

The tire pressure table can be found on the seat base or on the B-pillar on the driver's side.

ⓘ The data in the illustrations are shown as examples.

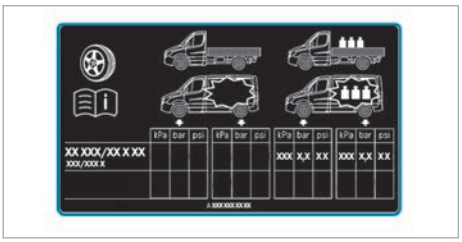

The tire pressure table shows the recommended tire pressure for the tires installed on this vehicle at the factory. The recommended tire pressures are valid for cold tires and different vehicle load conditions.

If one or more tire sizes precede a tire pressure, the tire pressure information following is only valid for those tire size.

If the preceding tire sizes are supplemented by the [ℹ] symbol, the subsequent tire pressure information shows alternative tire pressures.

The load conditions "partially laden" and "fully laden" are defined in the table by varying weights.

Some tire pressure tables only show the rim diameter instead of the complete tire size, e.g. R16. The rim diameter is part of the tire size and can be found on the side wall of the tire (→ page 263).

Front axle tire pressure on vehicles with all-wheel/rear-wheel drive and single tires
Front axle tire pressure with a max. front axle load of 4101 lbs (1860 kg)

Tire/disk wheel	Load condition	Max. front axle load 4101 lbs (1860 kg)
LT245/75R16 120/116Q	Fully laden	320 kPa (3.2 bar/46 psi)

Front axle tire pressure on vehicles with rear-wheel drive and single tires
Front axle tire pressure with a max. front axle load of 4409 lbs (2000 kg)

Tire/disk wheel	Load condition	Max. front axle load 4409 lbs (2000 kg)
LT245/75R16 120/116Q	Fully laden	360 kPa (3.6 bar/52 psi) [1]

[1] Only valid for vehicles with long wheelbase 171 in (4350 mm) and a permissible gross mass of over 7716 lbs (3.5 t).

Rear axle tire pressure on vehicles with all-wheel/rear-wheel drive and single tires
Rear axle tire pressure with a max. rear axle load of 5357 lbs (2430 kg)

Tire/disk wheel	Load condition	Max. rear axle load 5357 lbs (2430 kg)
LT245/75R16 120/116Q	Fully laden	480 kPa (4.8 bar/70 psi)
LT245/75R16 120/116Q	Partially laden [2]	420 kPa (4.2 bar/61 psi) [2]

[2] The use of this reduced tire pressure is only permissible if it can be ensured by weighing the vehicle that the rear axle load of 4960 lbs (2250 kg) is not exceeded. In case of doubt, inflate to 480 kPa (4.8 bar/70 psi).

Front axle tire pressure for vehicles with all-wheel/rear-wheel drive and twin tires
Front axle tire pressure with a max. front axle load of 4079 lbs (1850 kg)

Tire/disk wheel	Load condition	Max. front axle load 4079 lbs (1850 kg)
LT215/85R16 115/112Q	Fully laden	380 kPa (3.8 bar/55 psi)

Front axle tire pressure with a max. front axle load of 4409 lbs (2000 kg)

Tire/disk wheel	Load condition	Max. front axle load 4409 lbs (2000 kg)
LT215/85R16 115/112Q	Fully laden	420 kPa (4.2 bar/61 psi)

Front axle tire pressure with a max. front axle load of 4630 lbs (2100 kg)

Tire/disk wheel	Load condition	Max. front axle load 4630 lbs (2100 kg)
LT215/85R16 115/112Q	Fully laden	450 kPa (4.5 bar/65 psi)

Rear axle tire pressure for vehicles with all-wheel/rear-wheel drive and twin tires
Rear axle tire pressure with a max. rear axle load of 7055 lbs (3200 kg)

Tire/disk wheel	Load condition	Max. rear axle load up to 7055 lbs (3200 kg)
LT215/85R16 115/112Q	Fully laden	370 kPa (3.7 bar/54 psi)

Rear axle tire pressure with a max. rear axle load of 7716 lbs (3500 kg)

Tire/disk wheel	Load condition	Max. rear axle load 7716 lbs (3500 kg)
LT215/85R16 115/112Q	Fully laden	400 kPa (4.0 bar/58 psi)

Rear axle tire pressure with a max. rear axle load of 7937 lbs (3600 kg)

Tire/disk wheel	Load condition	Max. rear axle load 7937 lbs (3600 kg)
LT215/85R16 115/112Q	Fully laden	420 kPa (4.2 bar/61 psi)

Front axle tire pressure on vehicles with super-single tires
Front axle tire pressure with a max. front axle load of 4079 lbs (1850 kg)

Tire/disk wheel	Load condition	Max. front axle load 4079 lbs (1850 kg)
225/75R16C 121/120R (122L)	Fully laden	340 kPa (3.4 bar/49 psi)

Front axle tire pressure with a max. front axle load of 4409 lbs (2000 kg)

Tire/disk wheel	Load condition	Max. front axle load 4409 lbs (2000 kg)
225/75R16C 121/120R (122L)	Fully laden	370 kPa (3.7 bar/54 psi)

Rear axle tire pressure on vehicles with rear-wheel drive and super-single tires
Rear axle tire pressure with a max. rear axle load of 7055 lbs (3200 kg)

Tire/disk wheel	Load condition	Max. rear axle load 7055 lbs (3200 kg)
285/65R16C 131R	Fully laden	460 kPa (4.6 bar/67 psi)

Rear axle tire pressure with a max. rear axle load of 7716 lbs (3500 kg)

Tire/disk wheel	Load condition	Max. rear axle load 7716 lbs (3500 kg)
285/65R16C 131R	Fully laden	520 kPa (5.2 bar/75 psi)

Be sure to also observe the following further related subjects:

- Notes on tire pressure (→ page 252)
- Tire and Loading Information placard (→ page 259)
- Maximum tire pressure (→ page 263)

Overview of tire pressure table for emergency spare wheels

Tire/emergency spare wheel	Air pressure	In combination with vehicle tires
225/75 R16C 121/120R (122L) [1]	370 kPa (3.7 bar/54 psi)	225/75 R16C 121/120R (122L)
225/75 R16C 121/120R (122L) [1]	690 kPa (6.9 bar/100 psi)	285/65 R16C 131R

[1] Valid for use as an emergency spare wheel on super-single vehicles for a distance not exceeding 62 miles (100 km) and at a maximum permissible speed of 34 mph (55 km/h).

Tire pressure monitoring system

Function of the tire pressure monitoring system

DANGER Risk of accident due to incorrect tire pressure

Each tire, including the spare (if provided), should be checked monthly when cold and inflated to the inflation pressure recommended by the vehicle manufacturer on the vehicle placard or tire inflation pressure label. (If your vehicle has tires of a different size than the size indicated on the vehicle placard or tire inflation pressure label, you should determine the proper tire inflation pressure for those tires.)

As an added safety feature, your vehicle has been equipped with a tire pressure monitoring system (TPMS) that illuminates a low tire pressure telltale when one or more of your tires is significantly under-inflated. Accordingly, when the low tire pressure telltale illuminates, you should stop and check your tires as soon as possible, and inflate them to the proper pressure. Driving on a significantly under-inflated tire causes the tire to overheat and can lead to tire failure. Under-inflation also reduces fuel efficiency and tire tread life, and may affect the vehicle's handling and stopping ability. Please note that the TPMS is not a substitute for proper tire maintenance, and it is the driver's responsibility to maintain correct tire pressure, even if under-inflation has not reached the level to trigger illumination of the TPMS low tire pressure telltale.

Your vehicle has also been equipped with a TPMS malfunction indicator to indicate when the system is not operating properly. The TPMS malfunction indicator is combined with the low tire pressure telltale. When the system detects a malfunction, the telltale will flash for approximately one minute and then remain continuously illuminated. This sequence will continue upon subsequent vehicle start-ups as long as the malfunction exists.

When the malfunction indicator is illuminated, the system may not be able to detect or signal low tire pressure as intended. TPMS malfunctions may occur for a variety of reasons,

including the installation of replacement or alternate tires or wheels on the vehicle that prevent the TPMS from functioning properly.
▶

The system measures the tire pressure and the temperature of the tires installed on the vehicle by means of a tire pressure sensor.

New tire pressure sensors, e.g. in winter tires, are automatically taught-in during the first journey.

The tire pressure and the tire temperature appear in the display of the instrument cluster (→ page 187).

If there is a substantial loss of tire pressure, a warning is issued:

- via display messages (→ page 313)
- via the [(!)] warning lamp in the instrument cluster (→ page 328)

It is the driver's responsibility to set the tire pressure to the recommended cold tire pressure suitable for the operating situation. Set the tire pressure for cold tires using a tire pressure gage. Note that the tire pressure monitoring system must first learn the correct tire pressure for the current operating situation.

In most cases, the tire pressure monitoring system will automatically update the new reference values after you have changed the tire pressure. You can, however, also update the reference values by restarting the tire pressure monitoring system manually (→ page 258).

System limits

The system may be impaired or inoperative in the following situations:

- if the tire pressure has been set incorrectly
- if there is a sudden pressure loss caused, for example, by a foreign object penetrating the tire
- if there is a malfunction caused by another radio signal source
- if there is a change of tire size

Bear in mind the following related topic:

- Notes on tire pressure (→ page 252)

Checking the tire pressure with the tire pressure monitoring system

Requirements

- The vehicle is switched on.

Instrument cluster:

Service ▸▸ Tires

One of the following displays appears:

- Current tire pressure and tire temperature of the individual wheels

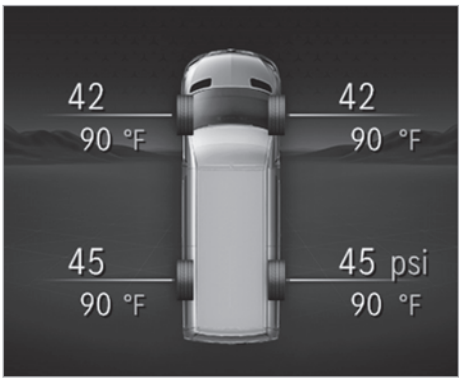

Instrument cluster display

- Tire pressure will be displayed after driving a few minutes: The teach-in process of the system is not yet complete. The tire pressures are already being monitored.

▶ Compare the tire pressure with the recommended tire pressure for the current operating status (→ page 253). Observe the notes on tire temperature (→ page 252).

ⓘ The values displayed on the instrument cluster may deviate from those on the tire pressure gage, as they refer to sea level. At high altitudes, the tire pressure indicated on a pressure gage is higher than that shown on the instrument cluster display. If this is the case, do not reduce the tire pressure.

Refer also to the following related topic:

- Notes on tire pressure (→ page 252)

Restarting the tire pressure monitoring system

Requirements:

- The recommended tire pressure is correctly set for the respective operating condition on each of the wheels (→ page 252).
- **Restart the tire pressure monitoring system in the following situations:**
  - If the tire pressure has changed.
  - If the wheels or tires have been changed or newly installed.

Instrument cluster:

Service ▸▸ Tires

▶ Scroll down in the menu.
The message Use current pressures as new reference values? appears in the instrument cluster.

▶ Confirm the message to initiate a restart.
The message Tire Press. Monitor Restarted appears in the instrument cluster.

Current warning messages are deleted and the [ⓘ] yellow warning lamp goes out.

After you have driven for a few minutes, the system checks whether the current tire pressure is within the specified range. The current tire pressure is then accepted as a reference value and monitored.

Bear in mind the following related topic:

- Notes on tire pressure (→ page 252)

Radio equipment approval of the tire pressure monitoring system

Country	Radio equipment approval number
Canada	IC: 4008C-TSSRE4A Operation is subject to the following two conditions: (1) this device may not cause harmful interference, and (2) this device must accept any interference received, including interference that may cause undesired operation.
Mexico	Model: TSSRE4A & TSSSG4G6, IFETEL: RLVHUTS17-0806
USA	FCC ID: YGOTSSRE4A This device complies with Part 15 of the FCC Rules. Operation is subject to the following two conditions: (1) this device may not cause harmful interference, and (2) this device must accept any interference received, including interference that may cause undesired operation. WARNING: Any changes or modification not expressly approved by the party responsible for compliance could void the user's authority to operate this equipment.

Loading the vehicle

Tire and Loading Information placard

WARNING Risk of an accident when driving with an overloaded tire

Overloaded tires may overheat and burst. Overloaded tires can impair the steering and handling characteristics and lead to brake failure.

- Observe the load rating of the tires.
- The load rating must be at least half the permissible axle load of the vehicle.
- Mercedes-Benz recommends you use the load-bearing index, which is given in the vehicle documents.
- Never overload the tires by exceeding the maximum load.

Only vehicles with a gross vehicle weight of less than 10,000 lbs (4,536 kg) have a Tire and Loading Information placard on the B-pillar on the driver's side.

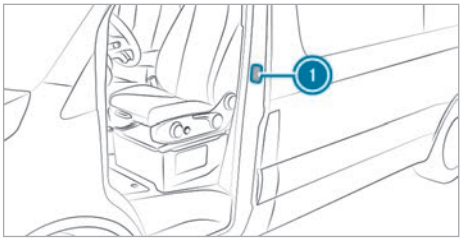

1 Tire and Loading Information placard

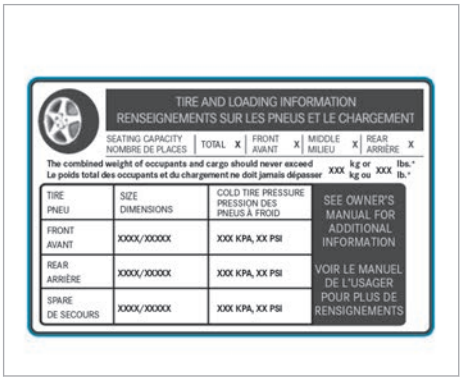

ⓘ The data shown in the illustration are sample data.

The Tire and Loading Information placard shows:

- The maximum number of seats indicates the maximum number of occupants permitted to travel in the vehicle.
- The maximum permissible load equals the gross weight of all vehicle occupants, the luggage and any payload.
- The recommended tire pressure for cold tires. The recommended tire pressures apply to the maximum permissible load and up to the maximum permissible vehicle speed.

Also observe the following information:

- The information about permissible weights on the vehicle identification plate (→ page 280)
- The information about tire pressures in the tire pressure table (→ page 253)

Additional related subjects:

- Determining the maximum payload (→ page 259)
- Notes on tire pressure (→ page 252)

Steps to determine the correct maximum load

The following steps have been developed based on the mandatory requirements for all manufacturers under Title 49, Code of U.S. Federal Regulations, Part 575 in accordance with the "National Traffic and Motor Vehicle Safety Act of 1966".

- **Step 1:** Locate the statement, "The combined weight of occupants and cargo should never exceed XXX kg or XXX lbs." ("Das kombinierte Gewicht von Insassen und Ladung sollte niemals XXX kg bzw. XXX lbs übersteigen") on the Tire and Loading Information placard of your vehicle.
- **Step 2:** Determine the combined weight of the driver and passengers who will be traveling in your vehicle.
- **Step 3:** Subtract the combined weight of the driver and passengers from XXX kg or XXX lbs.
- **Step 4:** The resulting figure equals the permissible load capacity for cargo and luggage. For example, if the "XXX" amount equals 1400 lbs and there will be five 150 lb passengers in your vehicle, the amount of available cargo and luggage load capacity is 650 lbs (1400 - 750 (5 x 150) = 650 lbs).
- **Step 5:** Determine the combined weight of any cargo and luggage being loaded into the vehicle. For safety reasons, this weight must not

exceed the permissible load capacity calculated in step 4.

▶ **Step 6:** If your vehicle is towing a trailer, load from the trailer is transferred to your vehicle. Consult these instructions in order to determine how this reduces the potential load and luggage capacity of your vehicle.

ⓘ Note that not all vehicles are approved for trailer operation. Trailer operation is only permissible if a trailer hitch is installed and a towing capacity is specified in your vehicle documents. If in doubt, ask an authorized Mercedes-Benz dealer.

Even if you have calculated the total payload carefully, you should still make sure that the maximum permissible gross mass and the maximum permissible axle loads of your vehicle are not exceeded. Information for this can be found on the vehicle identification plate.

▶ Weigh the laden vehicle – including driver, passengers and payload – on a suitable vehicle weighbridge.
The measured values must not exceed the maximum permitted values listed on the vehicle identification plate.

Additional related subjects:

- Sample calculation for determining the maximum payload (→ page 260)
- Tire and Loading Information placard (→ page 259)
- Tire pressure table (→ page 253)
- Vehicle identification plate (→ page 280)

Sample calculation for determining the maximum load

The following table has examples of how to calculate total and cargo load capacities with varying seating configurations and different numbers and sizes of occupants. The following examples use a maximum load of 1,500 lbs (680 kg). **This value is for illustrative purposes only.** Make sure you are using the actual load limit for your vehicle stated on your vehicle's Tire and Loading Information placard (→ page 259).

The higher the weight of all the occupants, the smaller the maximum load for luggage.

Step 1

	Example 1	Example 2
Combined maximum weight of occupants and load (data from the Tire and Loading Information placard)	1500 lbs (680 kg)	1500 lbs (680 kg)

Step 2

	Example 1	Example 2
Number of people in the vehicle (driver and occupants)	5	1
Distribution of the occupants	Front: 2 Rear: 3	Front: 1
Weight of occupants	Occupant 1: 150 lbs (68 kg) Occupant 2: 180 lbs (82 kg) Occupant 3: 160 lbs (73 kg) Occupant 4: 140 lbs (63 kg) Occupant 5: 120 lbs (54 kg)	Occupant 1: 200 lbs (91 kg)
Total weight of all occupants	750 lbs (340 kg)	200 lbs (91 kg)

Step 3

	Example 1	Example 2
Permissible load (maximum gross vehicle weight rating from the Tire and Loading Information placard minus the gross weight of all occupants)	1500 lbs (680 kg) - 750 lbs (340 kg) = 750 lbs (340 kg)	1500 lbs (680 kg) - 200 lbs (91 kg) = 1300 lbs (589 kg)

Tire labeling

Overview of tire labeling

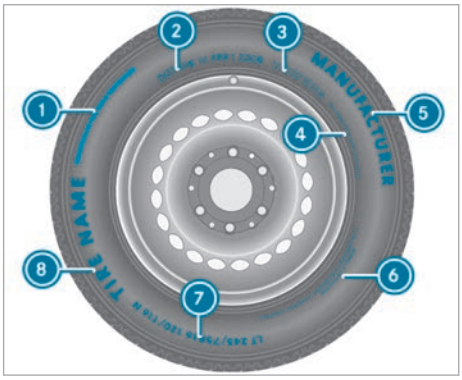

1. Uniform Tire Quality Grading Standards (→ page 261)
2. DOT (Department of Transportation), (TIN) Tire Identification Number (→ page 262)
3. Maximum tire load (→ page 262)
4. Maximum tire pressure (→ page 263)
5. Manufacturer
6. Characteristics of the tire (→ page 263)
7. Tire size designation, load-bearing capacity and speed rating (→ page 263)
8. Tire name

ⓘ The data shown in the illustration is sample data.

Information on tire quality grades

According to the requirements of the U.S. Department of Transportation's "Uniform Tire Quality Grading Standards" tire manufacturers must grade their tires using the following three performance factors:

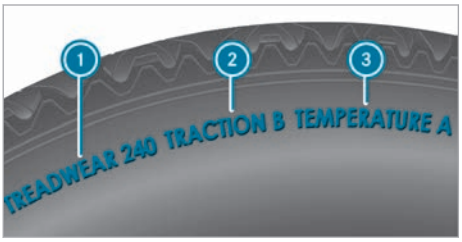

1. Tread wear grade
2. Traction grade
3. Temperature grade

ⓘ The data shown in the illustration is sample data.

ⓘ This grading is not legally prescribed for Canada, but specified in most cases anyway.

Tread wear grade

The tread wear grade is a comparative grading based on tread wear grade tests conducted under controlled conditions on a specified U.S. Department of Transportation test track. For example, a tire graded 150 would wear one and one-half times as well on the government test track as a tire graded 100.

The relative performance of tires depends upon the actual conditions of their use, however, and may depart significantly from the norm due to variations in driving habits, service practices and differences in road characteristics and climate conditions.

Traction grade

⚠ **DANGER** Risk of accident due to inadequate traction

The traction grade assigned to this tire is based on straight-ahead braking traction tests.

▶ Always adapt your driving style and drive at a speed to suit the prevailing traffic and weather conditions.

NOTE Damage to the drivetrain from wheelspin

▶ Avoid wheelspin.

The traction grades – from highest to lowest – are AA, A, B and C. These grades relate to the tire's ability to come to a standstill on a wet pavement under controlled conditions on a specified U.S. government test surface made from asphalt and concrete.

Temperature grade

WARNING Risk of accident from tire overheating and tire failure

Excessive speed, underinflation, or excessive loading, either separately or in combination, can cause excessive heat build-up and possible tire failure.

▶ Observe the recommended tire pressure.

▶ Regularly check the pressure of all the tires.

▶ Adjust the tire pressure, if necessary.

The temperature grades are A (highest grade), B and C. These relate to a tire's resistance to heat and its ability to release heat on a specified test wheel in laboratory tests under controlled conditions. Sustained high temperatures can cause the material of the tire to degenerate and reduce tire life. In addition, excessively high temperatures can lead to sudden tire failure. Grade C refers to a performance which all passenger vehicle tires must exhibit, according to the U.S. Department of Transportation's requirements.

Information on DOT and TIN (Tire Identification Number)

U.S. tire regulations indicate that every tire manufacturer or retreader must imprint a TIN in or on the sidewall of each tire produced.

ⓘ The data shown in the illustration is sample data.

The TIN is a unique identification number for tires and consists of the following components:

- **DOT (Department of Transportation):** tire symbol ① indicates that the tire complies with the requirements of the U.S. Department of Transportation.
- **Manufacturer identification code:** manufacturer identification code ② provides information about the tire manufacturer. New tires have a code with two symbols. Retreaded tires have a code with four symbols. For further information about retreaded tires, see (→ page 266).
- **Tire size:** identifier ③ describes the tire size.
- **Tire type code:** tire type code ④ can be used by the manufacturer as a code to describe specific characteristics of the tire.
- **Date of manufacture:** date of manufacture ⑤ provides information about the age of a tire. The 1st and 2nd numbers indicate the calendar week and the 3rd and 4th numbers indicate the year of manufacture (e.g. "3208" refers to the 32nd week of the year 2008).

Information on maximum tire load

ⓘ The data shown in the illustration is sample data.

Maximum tire load ① is the maximum permissible weight for which the tire is approved.

Do not overload the tires by exceeding the maximum permissible load. The maximum permissible load can be found on the vehicle's Tire and Loading Information placard on the B-pillar on the driver's side (→ page 259).

Information on maximum tire pressure

ⓘ The data shown in the illustration is sample data.

Maximum permitted tire pressure ①, which is permitted for the tires must not be exceeded.

Exception: when using the 225/75 R16C 121/120R (122L) tires as a spare wheel on the rear axle of Super Single vehicles with a distance limit of 62 mi (100 km) and speed limit of 34 mph (55 km/h).

Information on tire characteristics

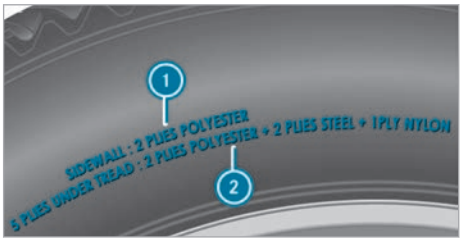

ⓘ The data shown in the illustration is sample data.

This information describes the type of tire cord and the number of layers in sidewall ① and under tire tread ②.

Tire size designation, load-bearing capacity and speed rating

⚠ WARNING Risk of injury through exceeding the specified tire load-bearing capacity or the permissible speed rating

Exceeding the specified tire load rating or the permissible speed rating may lead to tire damage and to the tires bursting.

▶ Therefore, only use tire types and sizes approved for your vehicle model.

▶ Observe the tire load rating and speed rating required for your vehicle.

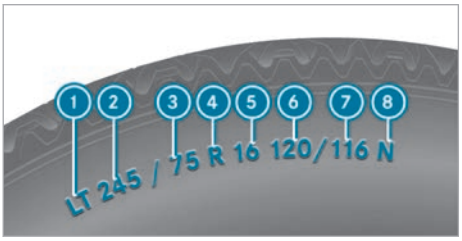

① First letter(s)
② Nominal tire width in millimeters
③ Aspect ratio in %
④ Tire code
⑤ Rim diameter
⑥ Load-bearing index, Single tires
⑦ Load-bearing index, twin tires
⑧ Speed rating

ⓘ The data shown in the illustration is sample data.

Further information about reading tire data can be obtained from any qualified specialist workshop.

First letter(s) ①:
- "LT": light truck tires according to US manufacturing standards
- "C": tires for commercial usage in accordance with European manufacturer standards

Aspect ratio (in percent) ③:
The size ratio between the tire height and tire width and is shown in percent (tire height divided by tire width).

Tire code ④ (tire type):
- "R": radial tire

Rim diameter ⑤:
The diameter of the bead seat (not the diameter of the rim flange). The rim diameter is specified in inches (in).

Load-bearing index ⑥ and ⑦:
Numerical code which specifies the maximum load-bearing capacity of a tire ("91" equals, e.g. 1,356 lb (615 kg)).

The tire load-bearing capacity must be at least half the permissible axle load of the vehicle. Do not overload the tires by exceeding the maximum permissible load of the tires.

See also:

- Maximum permissible load on the Tire and Loading Information placard (→ page 259)
- Maximum tire load (→ page 262)

Speed rating ⑧:
Specifies the approved maximum design speed of the tire.

ⓘ An electronic speed limiter prevents your vehicle from exceeding a speed of 130 mph (210 km/h).

Ensure that your tires have the required speed rating. You can obtain information on the required speed rating at an authorized Mercedes-Benz Center.

Summer tires

Index	Speed rating
L	Up to 75 mph (120 km/h)
M	Up to 81 mph (130 km/h)
N	Up to 87 mph (140 km/h)
P	Up to 93 mph (150 km/h)
Q	Up to 100 mph (160 km/h)
R	Up to 106 mph (170 km/h)

Summer, all-season and winter tires

Index	Speed rating
L M+S[1]	Up to 75 mph (120 km/h)
M M+S[1]	Up to 81 mph (130 km/h)
N M+S[1]	Up to 87 mph (140 km/h)
P M+S[1]	Up to 93 mph (150 km/h)
Q M+S[1]	Up to 100 mph (160 km/h)
R M+S[1]	Up to 118 mph (170 km/h)

[1]: Or "M+S " for winter tires.

Winter tires are marked with the snowflake symbol and fulfill the requirements of the Rubber Manufacturers Association (RMA) and the Rubber Association of Canada (RAC) regarding the tire traction on snow.

Information on definitions (tires and loading)

Tire structure and characteristics: describes the number of layers or the number of rubber-coated layers in the tire tread and the tire wall. These are made of steel, nylon, polyester and other materials.

Bar: metric unit for tire pressure. 14.5038 pounds per square inch (psi) and 100 kilopascals (kPa) are the equivalent of 1 bar.

DOT (Department of Transportation): DOT marked tires fulfill the requirements of the U.S. Department of Transportation.

Average weight of vehicle occupants: the number of occupants for which the vehicle is designed multiplied by 150 lbs (68 kg).

Uniform Tire Quality Grading Standards: a uniform standard to grade the quality of tires with regards to tread quality, tire traction and temperature characteristics. The quality grading assessment is made by the manufacturer in accordance with test specifications of the U.S. government. The quality grade of a tire is imprinted on the sidewall of the tire.

Recommended tire pressure: the recommended tire pressure is the pressure specified for the tires installed on the vehicle at the factory.

The Tire and Loading Information placard contains the recommended tire pressures for cold tires, the maximum permissible load and the maximum permissible vehicle speed.

The tire pressure table contains the recommended tire pressures for cold tires under various operating conditions, i.e. load and/or speed of the vehicle.

Increased vehicle weight due to optional equipment: the combined weight of all standard and

optional equipment available for the vehicle, regardless of whether it is actually installed on the vehicle or not.

Rim: the part of the wheel on which the tire is installed.

GAWR (Gross Axle Weight Rating): GAWR is the gross axle weight rating. The actual load on an axle must never exceed the Gross Axle Weight Rating. You can find the Gross Axle Weight Rating on the B-pillar on the driver's side.

Speed rating: the speed rating is part of the tire identification. It specifies the speed range for which a tire is approved.

GVW (Gross Vehicle Weight): the Gross Vehicle Weight includes the weight of the vehicle including fuel, tools, the spare wheel, accessories installed, occupants, luggage and the trailer drawbar noseweight if applicable. The Gross Vehicle Weight must never exceed the Gross Vehicle Weight Rating (GVWR) specified on the B-pillar on the driver's side.

GVWR (Gross Vehicle Weight Rating): the GVWR is the maximum permitted gross weight of the fully laden vehicle (weight of the vehicle including all accessories, occupants, fuel, luggage and the trailer drawbar noseweight if applicable). The Gross Vehicle Weight Rating is specified on the vehicle identification plate on the B-pillar on the driver's side.

Maximum weight of the laden vehicle: the maximum weight is the sum of the vehicle's curb weight, weight of the accessories, maximum load and the weight of the factory-installed optional equipment.

Kilopascal (kPa): metric unit for tire pressure. 6.9 kPa are the equivalent of 1 psi. Another unit for tire pressure is bar. 100 kilopascals (kPa) are the equivalent of 1 bar.

Curb weight: the weight of a vehicle with standard equipment including the maximum capacity of fuel, oil and coolant. It also includes the air-conditioning system and optional equipment if these are installed on the vehicle, but does not include passengers or luggage.

Maximum tire load: the maximum tire load is the maximum permissible weight in kilograms or lbs for which a tire is approved.

Maximum permissible tire pressure: maximum permissible tire pressure for one tire.

Maximum load on one tire: maximum load on one tire. This is calculated by dividing the maximum axle load for one axle by two.

PSI (pounds per square inch): standard unit of measurement for tire pressure.

Aspect ratio: relationship between tire height and tire width in percent.

Tire pressure: pressure inside the tire applying outward force to every square inch of the tire's surface. The tire pressure is specified in pounds per square inch (psi), in kilopascals (kPa) or in bar. The tire pressure should only be corrected when the tires are cold.

Tire pressure of cold tires: the tires are cold when the vehicle has been parked with the tires out of direct sunlight for at least three hours and the vehicle has been driven less than 1 mile (1.6 km).

Tire contact surface: the part of the tire that comes into contact with the road.

Tire bead: the purpose of the tire bead is to ensure that the tire sits securely on the wheel rim. There are several wire cores in the tire bead to prevent the tire from changing length on the wheel rim.

Side wall: the part of the tire between the tread and the tire bead.

Special equipment weight: the combined weight of those optional extras that weigh more than the replaced standard parts and more than 5 lbs (2.3 kg). Special equipment, such as high-performance brakes, level control system, a roof luggage rack or a high-performance battery, are not included in the curb weight and the weight of the accessories.

TIN (Tire Identification Number): a unique identification number which can be used by a tire manufacturer to identify tires, for example, in a product recall, and thus identify the purchasers. The TIN is made up of the manufacturer identification code, tire size, tire type code and the manufacturing date.

Load-bearing index: the load-bearing index (also load index) is a code that contains the maximum load-bearing capacity of a tire.

Traction: traction is the result of friction between the tires and the road surface.

Wear indicator: narrow bars (tread wear bars) that are distributed over the tire tread. If the tire tread is level with the bars, the wear limit of 1/16 in (1.6 mm) has been reached.

Distribution of vehicle occupants: distribution of vehicle occupants over designated seat positions in a vehicle.

Maximum permissible payload weight: nominal load and luggage load plus 150 lbs (68 kg) multiplied by the number of seats in the vehicle.

Changing a wheel

Notes on selecting, installing and replacing tires

You can ask for information regarding permitted wheel/tire combinations at a qualified specialist workshop.

WARNING Risk of accident due to incorrect wheel and tire dimensions

If wheels and tires of the wrong size are used, the service brakes or wheel suspension components may be damaged.

▶ Always replace wheels and tires with ones that fulfill the specifications of the original part.

For wheels, pay attention to the following:

- Designation
- Type
- Permissible wheel load
- Wheel offset

For tires, pay attention to the following:

- Designation
- Manufacturer
- Type
- Load-bearing index
- Speed rating

WARNING Risk of injury through exceeding the specified tire load-bearing capacity or the permissible speed rating

Exceeding the specified tire load rating or the permissible speed rating may lead to tire damage and to the tires bursting.

▶ Therefore, only use tire types and sizes approved for your vehicle model.

▶ Observe the tire load rating and speed rating required for your vehicle.

NOTE Vehicle and tire damage due to tire types and sizes that have not been approved

For safety reasons, only use tires, wheels and accessory parts which have been specially approved by Mercedes-Benz for your vehicle.

These tires have been specially adapted for use with driving systems and driving safety systems, such as ABS or ESP®.

Otherwise, certain properties, such as handling characteristics, vehicle noise emissions and consumption could be adversely affected. Other wheel sizes may cause the tires to come into contact with the vehicle body and axle components when under load. This may result in damage to the tire or the vehicle.

▶ Only use tires, wheels and accessory parts that have been checked and recommended by Mercedes-Benz.

NOTE Driving safety put at risk by retreaded tires

Retreaded tires are not checked or recommended by Mercedes-Benz, as previous damage is not always detected during the retread process.

Driving safety cannot, therefore, be guaranteed.

▶ Do not use used tires when their previous usage is unknown.

NOTE Possible wheel and tire damage when driving over obstacles

Large wheels have a smaller section width. As the section width decreases, the risk of wheels and tires being damaged when driving over obstacles increases.

▶ Avoid obstacles or drive especially carefully.

▶ Reduce your speed when driving over curbs, speed bumps, manhole covers and potholes.

▶ Avoid particularly high curbs.

Accessories that are not approved for your vehicle by Mercedes-Benz , or are not being used correctly, can impair operating safety.

Before purchasing and using non-approved accessories, visit a qualified specialist workshop and enquire about:

- suitability
- legal stipulations
- factory recommendations

Observe the following points when selecting, installing and replacing tires:

- Use only tires and wheels of the same type, design (winter tires, all-season tire) and make.
- Only install wheels of the same size and tread design on one axle (left and right).

  It is only permissible to install a different wheel size to this in the event of a flat tire in order to drive to the specialist workshop.
- Only install tires of the correct size onto the wheels.
- **Vehicles with a tire pressure monitoring system:** all installed wheels must be equipped with functioning sensors for the tire pressure monitoring system.
- At temperatures below 50 °F (10 °C), use winter tires or all-season tires marked M+S for all wheels.

  Winter tires bearing the snowflake symbol in addition to the M+S marking provide the best possible grip in wintry road conditions.
- Only use tires with the same tread.
- Observe the maximum permissible speed for the installed tires.

  If this is below the vehicle's maximum permissible speed, this must be indicated in an appropriate label in the driver's field of vision.
- Break in new tires at moderate speeds for the first 60 miles (100 km).
- Replace the tires after six years at the latest, regardless of wear.

For more information on wheels and tires, contact a qualified specialist workshop.

ⓘ **Vehicles with twin tires:**
For vehicles with twin tires with a GVW of 11,030 lbs or 12,125 lbs, only use tires with the dimension LT 215/85 R16 which have been approved for this vehicle by the manufacturer. It is not permissible to use tires with different dimensions; doing so may lead to the general operating permit being rendered invalid.

ⓘ **Vehicles with single tires:**
For vehicles with single tires with a GVW less than or equal to 9480 lbs, only use tires with the dimension LT 245/75 R16 which have been approved for this vehicle by the manufacturer. It is not permissible to use tires with different dimensions; doing so may lead to the general operating permit being rendered invalid.

ⓘ **Vehicles with Super single tires:**
For vehicles with single tires with a GVW of 11,030 lbs, only use tires with the dimensions 225/75 R16C (FA) and 285/65 R16C (RA) which have been approved for this vehicle by the manufacturer. It is not permissible to use tires with different dimensions; doing so may lead to the general operating permit being rendered invalid.

Also observe the following further related subjects:

- Notes on tire pressure (→ page 252)
- Tire and Loading Information placard (→ page 259)
- Tire size designation, load-bearing capacity and speed rating (→ page 263)
- Tire pressure table (→ page 253)
- Notes on the emergency spare wheel (→ page 273)

Notes on changing wheels

⚠ **WARNING** Risk of injury through different wheel sizes

Rotating the front and rear wheels can severely impair the driving characteristics.

The wheel brakes or suspension components may also be damaged.

▶ Rotate front and rear wheels only if the wheels and tires are of the same dimensions.

On vehicles that have the same size front and rear wheels, rotate the wheels according to the intervals in the tire manufacturer's warranty book in your vehicle documents. If this is not available, rotate the tires every 3,000 (5,000) to 6,000 miles (10,000 km), depending on the degree of wear. Ensure that the direction of rotation is maintained.

It is imperative to observe the instructions and safety notes on "Changing a wheel" when doing so.

Wheel size groups

The determined vehicle speed is displayed in the instrument cluster and is important for controlling the driving safety systems and driving systems. The display accuracy of the speedometer and the odometer is legally prescribed. Determining the speed is dependent on the tire size or the rolling circumference of the tires. The rim diameter is always specified in inches.

For this reason, the vehicle's control units can be coded for the following wheel size groups:

Wheel size group 3

- 205/75 R16C FA
- 225/75 R16C FA
- 285/65 R16C RA
- LT245/75 R16
- LT215/85 R16

ⓘ Mercedes-Benz recommends that you stay within a wheel size group when changing a tire. In this way, you avoid having to recode the control units.

If you change the wheel size of your vehicle, for instance when changing wheels for winter operation, check that it is assigned to the correct wheel size group. If the wheel size group changes, you must have your vehicle's control units recoded at a qualified specialist workshop.

Otherwise, the display accuracy of the speedometer and the odometer will be outside the legally prescribed tolerance. It may also be lower, i.e. the current road speed is then higher than the speed shown on the speedometer. If a deviation is outside the range of tolerance, driving safety systems and driving systems may be operationally impaired or may detect a malfunction and switch themselves off.

Information on the direction of the tires' rotation

Tires with a specified direction of rotation have additional benefits, e.g. if there is a risk of hydroplaning. You will only gain these benefits if the correct direction of rotation is observed.

An arrow on the sidewall of the tire indicates its correct direction of rotation.

You may also install a spare wheel against the direction of rotation. Observe the time restriction on use as well as the speed limitation specified on the spare wheel.

Notes on storing wheels

Observe the following when storing wheels:

- Wheels that have been removed should be stored in a cool, dry and, if possible, dark place.
- Protect the tires from oil, grease and fuel.

Overview of tire-change tool kit

Required tire-changing tools may include, for example:

- Jack
- Wheel wrench

ⓘ You will find the maximum load capacity of the jack stated on the adhesive label attached to the jack.
The jack is maintenance-free. If there is a malfunction, please contact a qualified specialist workshop.

Vehicles with rear wheel drive

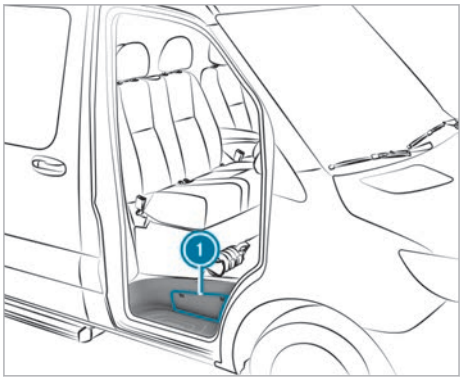

The tire-change tool kit is located in stowage compartment ① above the step of the front passenger door and in the stowage compartment in the footwell on the front passenger side.

Preparing the vehicle for a wheel change

Requirements:

- The wheel-change tool kit is available.
- There is a spare wheel available.
- The vehicle is not on a slope.
- The vehicle is on solid, non-slippery and level ground.

- Apply the parking brake.
- Move the front wheels to the straight-ahead position.
- **Vehicles with automatic transmission:** shift to transmission position P.
- Switch off the vehicle.
- Make sure that the vehicle cannot be switched on.
- Take the vehicle tool kit from the footwell on the front passenger side (→ page 247).

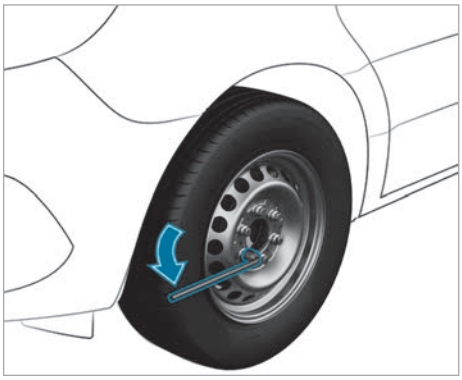

Vehicles with rear-wheel drive

- Take the jack and the tire-change tool kit out of the stowage compartment (→ page 268).
- If necessary, remove the wheel trim.
- Assemble the wheel wrench extension using the middle rod and the rod with the largest diameter from the three-part jack pump lever.
- Starting with the middle rod, slide the wheel wrench extension as far as it will go onto the wheel wrench.
- Using the wheel wrench, loosen the wheel nuts or bolts on the wheel you wish to change by about one full turn. Do not unscrew the wheel nuts or bolts completely.
- Raise the vehicle (→ page 269).

Raising the vehicle when changing a wheel

WARNING Risk of injury due to the jack tipping over

If you park a vehicle with air suspension, the air suspension can remain active for up to an hour, even if the vehicle is switched off. If you then raise the vehicle using the jack, the air suspension will attempt to even out the vehicle level.

The jack can tip over.

- Before raising the vehicle, press the Service button on the remote control for the air suspension.
  This prevents the vehicle level from being automatically readjusted or manually raised or lowered.

WARNING Risk of injury from incorrect positioning of the jack

If you do not position the jack correctly at the appropriate jacking point of the vehicle, the jack could tip with the vehicle raised.

- Only position the jack at the appropriate jacking point of the vehicle. The base of the jack must be positioned vertically under the jacking point of the vehicle.

WARNING Risk of injury from vehicle tipping

On slopes, the jack could tip with the vehicle raised.

- Never change a wheel on a slope.
- Consult a qualified specialist workshop.

NOTE Damage to the vehicle due to the jack

If the jack has not been positioned at the prescribed jack support points, the vehicle may suffer damage.

- Only position the jack at the jack support points provided for this purpose.

Requirements:

- There is nobody in the vehicle.
- The vehicle is prepared for changing a wheel (→ page 268).

Only position the jack on the jack support points intended for this purpose. Otherwise you could damage the vehicle.

Important notes on using the jack:

- Only use the vehicle-specific jack that has been tested and approved by Mercedes-Benz to raise the vehicle. If the jack is used incor-

rectly, it could tip over while the vehicle is raised.

- The jack is designed only to raise the vehicle for a short time while a wheel is being changed and is not suitable for carrying out maintenance work under the vehicle.
- Avoid changing a wheel on uphill or downhill slopes.
- The jack must be placed on a firm, flat and non-slip surface. If necessary, use a large, flat, load-bearing and non-slip underlay.
- The foot of the jack must be positioned vertically under the jack support point.

Safety instructions while the vehicle is raised:

- Do not put your hands or feet under the vehicle.
- Do not lie underneath the vehicle.
- Do not start the vehicle and do not release the parking brake.
- Do not open or close any doors.

Vehicles with rear-wheel drive

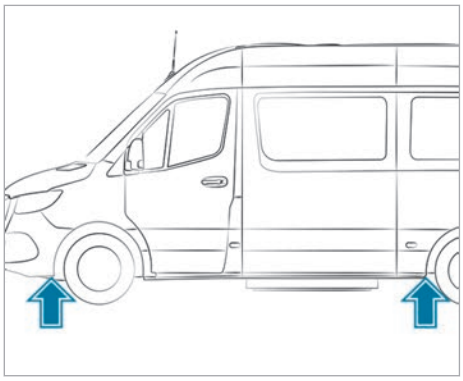

Jack support points

Only use the middle rod and the pump lever rod with the largest diameter for the jack as a wheel wrench extension. Only insert the middle rod on the wheel wrench, and always as far as it will go. Otherwise, the rods could bend and deform so much that they can no longer be used as pump levers for the jack.

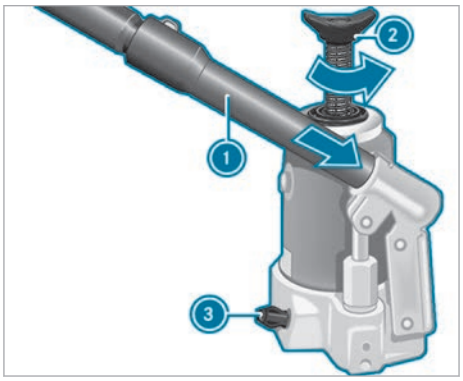

▶ **To prepare the hydraulic jack:** insert the third rod of the pump lever ① for the jack into the wheel wrench extension.

▶ Close the pressure release screw ③.

▶ To do this, use the flattened section on the pump lever ① to turn the pressure release screw ③ clockwise to the stop.

ⓘ Do not turn the pressure release screw ③ more than one or two full turns. Hydraulic fluid could otherwise escape.

▶ Insert the pump lever ① with the largest rod into the recess on the jack and secure by turning it clockwise.

▶ Place the jack vertically beneath the jack support points described below.

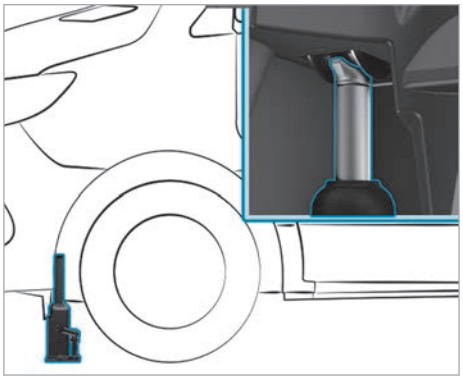

Jack support point, front axle

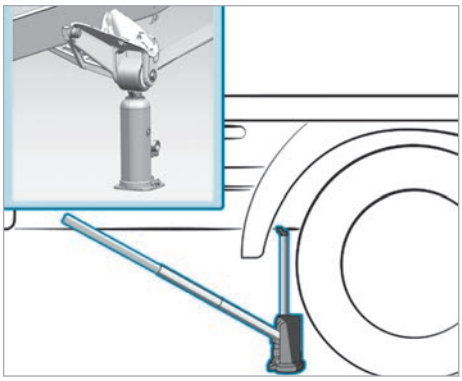

Jack support point, rear axle (example: chassis up to 3.5 t)

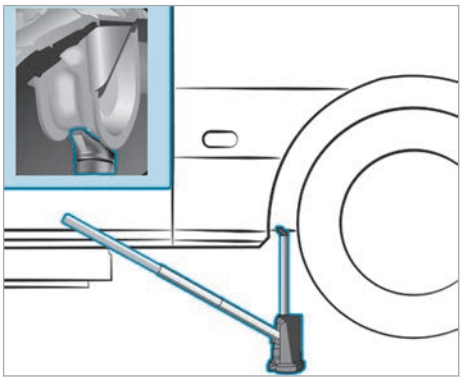

Jack support point, rear axle (example: panel van and Tourer up to 4.0 t)

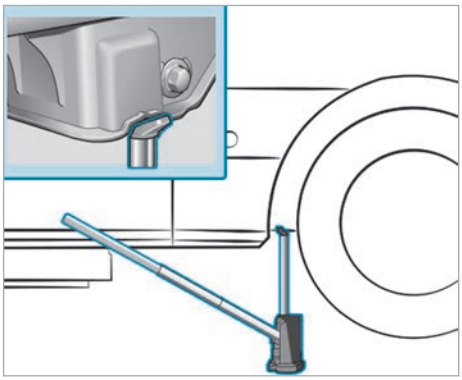

Jack support point, rear axle (5.0 t vehicles)

- Place the jack beneath the jack support point.
- **Vehicles with all-wheel drive:** turn the jack spindle ② counter-clockwise as far as it will go.
- Raise the vehicle until the tire is raised a maximum of 1.2 in (3 cm) off the ground.
- Loosen and remove the wheel (→ page 271).

Removing a wheel

Requirements

- The vehicle is raised (→ page 269).

When changing a wheel, avoid applying any force to the brake discs since this could impair the level of comfort when braking.

! **NOTE** Damage to threading from dirt on wheel bolts

- Do not place wheel bolts in sand or on a dirty surface.

- Unscrew the wheel bolts or nuts with the wheel nut wrench.
- On front wheels with wheel nuts, remove the wheel nut cover.
- Remove the wheel.
- Install the new wheel (→ page 271).

Installing a new wheel

Requirements:

- The wheel has been removed (→ page 271).

⚠ **WARNING** Risk of accident from losing a wheel

Oiled, greased or damaged wheel bolt/wheel nut threads or wheel hub/wheel mounting bolt threads can cause the wheel bolts/wheel nuts to come loose.

- Never oil or grease the threads.
- In the event of damage to the threads, contact a qualified specialist workshop immediately.
- Have the damaged wheel bolts or damaged hub threads replaced.
- Do not continue driving.

WARNING Risk of injury from tightening wheel bolts and nuts

If you tighten the wheel bolts or wheel nuts when the vehicle is raised, the jack could tip.

- Only tighten wheel bolts or wheel nuts when the vehicle is on the ground.

- Observe the instructions and safety notes on wheel-changing and the notes on tire selection (→ page 266).
- For safety reasons, only use wheel bolts or wheel nuts which have been approved by Mercedes-Benz and for the wheel in question.

When you install the steel spare wheel, it is essential you use the short wheel bolts for a steel wheel. Using other wheel bolts when installing the steel spare wheel may damage the brake system.

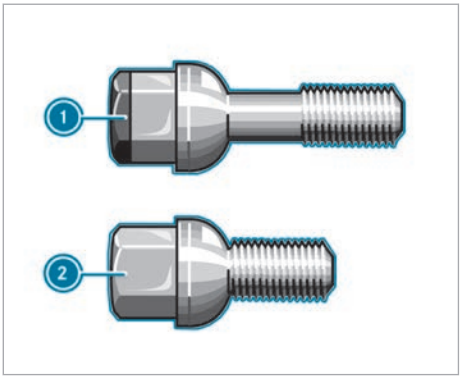

1. Wheel bolt for light-alloy wheel
2. Wheel bolt for steel wheel

- Clean the wheel and wheel hub contact surfaces.
- **Vehicle with super-single tires on the rear axle:** First, remove the adapter from the spare wheel and attach it to the wheel hub of the rear axle.
- Slide the wheel which is to be installed onto the wheel hub or the adapter for the spare wheel and push it on.

Vehicles with steel wheels

- Use the short wheel bolts intended for the steel spare wheel, which are found in the vehicle tool kit.
- Screw in the wheel bolts until they are hand-tight.

Vehicles with light-alloy wheels

- Use the long wheel bolts intended for the light-alloy spare wheel, which are found in the vehicle tool kit.
- Screw in the wheel bolts until they are hand-tight.

Wheels with wheel nuts

- Front wheels with wheel nut cover: press the wheel nut cover onto the wheel nuts.
- Screw in three wheel nuts over the fixing disks of the wheel nut cover.
- Turn the wheel so that the wheel bolts are in the middle of the holes.
- Screw in the remaining wheel nuts.
- Slightly tighten all wheel nuts.

Lowering the vehicle after a wheel change

WARNING Risk of accident due to incorrect tightening torque

The wheels could come loose if the wheel bolts or wheel nuts are not tightened to the prescribed torque.

- Ensure that the wheel bolts or wheel nuts are tightened to the prescribed tightening torque.
- If you are not sure, do not move the vehicle. Contact a qualified specialist workshop and have the tightening torque checked immediately.

Requirements:

- The new wheel has been installed (→ page 271).

Observe the notes on raising the vehicle (→ page 269).

Vehicles with rear wheel drive

Only use the middle rod and the pump lever rod with the largest diameter for the jack as a wheel wrench extension. Only fit the middle rod onto the wheel wrench, and always as far as it will go. Otherwise the rods could bend and deform to such an extent that they can no longer be used as pump levers for the jack.

Vehicles with ultrawide-base tires: if you install the spare wheel on the rear axle, do not exceed the maximum speed of 34 mph (55 km/h) and the maximum distance of 62 miles (100 km). Other-

wise the rear axle differential could be damaged owing to the different wheel speeds.

- Using the pump lever, slowly turn the drain screw on the jack approximately one revolution and carefully lower the vehicle.
- Place the jack to one side.
- Pull the rod with the smallest diameter off the pump lever.
  The shortened pump lever serves as a wheel wrench extension.
- Starting with the middle rod, slide the wheel wrench extension as far as it will go onto the wheel wrench.

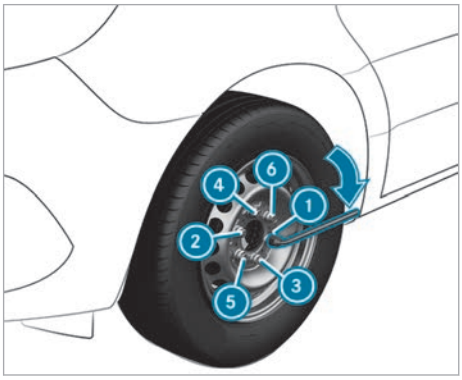

- Tighten the wheel bolts or nuts evenly in the sequence indicated (1 to 6).

  Specified tightening torque:
  - Steel wheel bolts: 177 lb-ft (240 Nm)
  - Wheel nuts: 133 lb-ft (180 Nm)
  - Light-alloy wheel bolts: 133 lb-ft (180 Nm)
- Push the piston on the hydraulic jack in again and close the drain screw.
- **Vehicles with all-wheel drive:** turn the jack spindle clockwise as far as it will go.

ⓘ On steel wheels with wheel bolts, you can now instal the hub caps. The intallation will depend on whether the hub cap acts as a wheel trim that covers the whole wheel, or just covers the center.

- **Wheel with wheel trim:** position the tire valve opening in the wheel trim over the tire valve.
- Push the edge of the hub cap onto the wheel rim with both hands until it engages into place. Make sure the hub cap retaining catches engage on the steel wheel.
- **Wheel with central hub cap:** position the retaining lugs of the central hub cap over the wheel bolts.
- Hit the middle of the hub cap to engage it on the wheel.
- Secure the defective wheel in the spare wheel holder.
- **Vehicles with ultrawide-base tires:** transport the defective rear wheel in the load area. The rear wheel is too large for the spare wheel holder.
- Check the tire pressure of the newly installed wheel and adjust it if necessary.
- Retighten the wheel bolts or wheel nuts to the specified tightening torque after the vehicle has been driven 31 miles (50 km).
- When using a wheel or spare wheel with a new or newly painted wheel rim, have the wheel bolts or wheel nuts retightened after approximately 620 miles (1000 km) to 3100 miles (5,000 km).

ⓘ **Vehicles with a tire pressure monitoring system:** all installed wheels must be equipped with functioning sensors.

Make sure to observe the following further related subject:

- Notes on tire pressure (→ page 252)

Spare wheel

Notes on the emergency spare wheel and spare wheel

Emergency spare wheel: wheel and/or tire dimensions as well as the type of tire are different from the wheel to be replaced.

ⓘ A label with the speed limitation can be found on the emergency spare wheel.

Spare wheel: wheel and tire dimensions as well as the type of tire correspond to the other installed wheels.

An installed emergency spare wheel or spare wheel changes the driving characteristics and bears risks.

⚠ **WARNING** Risk of accident due to incorrect wheel and tire dimensions

Mounting an emergency spare wheel or spare wheel may severely impair the driving characteristics.

There is an increased risk of an accident.

To prevent hazardous situations:

- ▶ Check the tire pressure of the spare wheel or emergency spare wheel once installed and, if necessary, adjust.
- ▶ The emergency spare wheel may only be used temporarily and must be replaced with a standard wheel as soon as possible.
- ▶ Never install more than one emergency spare wheel.
- ▶ Adapt your driving style and drive carefully in emergency spare wheel mode.
- ▶ Do not switch off ESP®.
- ▶ Do not use snow chains on the emergency spare wheel.
- ▶ Replace the emergency spare wheel after six years at the latest, regardless of wear.

- When using an emergency spare wheel or spare wheel (different from the wheel to be replaced), you must not exceed a permissible top speed of 50 mph (80 km/h).
- Have the emergency spare wheel or spare wheel replaced by a qualified specialist workshop (→ page 266).
- The tire pressure of the emergency spare wheel or spare wheel must be checked before starting a journey and, if necessary, adjusted (→ page 253).

⚠ **WARNING** Risk of accident due to damaged spare wheel with Super Single tires

Vehicles with Super Single tires

If you exceed the maximum speed or maximum distance, or re-install the spare wheel, its tire could be undetectably damaged and cause tire pressure loss.

You could lose control of the vehicle.

- ▶ Only use the spare wheel if it has not yet been installed on the rear axle with the current tire.
- ▶ If the spare wheel has been installed on the rear axle, have the tire of the spare wheel replaced after changing the wheel again.
- ▶ For safety reasons, when changing a tire ensure that only the tire valve type approved for the tires is used.

! **NOTE** Damage to the rear axle differential due to differing wheel speeds

Vehicles with Super Single tires: when you install the spare wheel on the rear axle, the rear axle differential may be damaged by the different wheel speeds.

- ▶ When the spare wheel is installed on the rear axle, observe the maximum speed of 34 mph (55 km/h) and a maximum driving distance of 62 mi (100 km).

ⓘ It is possible to use the spare wheel without restrictions only on the front axle of a vehicle with super-single tires.

The following should be checked regularly, particularly prior to long journeys:

- that the emergency spare wheel or spare wheel is firmly secured
- the tire pressure of the emergency spare wheel or spare wheel (adjust the tire pressure if necessary) (→ page 253)
- the fastenings of the emergency spare wheel holder or spare wheel holder

The spare wheel is located either in the load compartment or in a spare wheel holder under the vehicle.

Replace the tires after six years at the latest, regardless of wear. This also applies to the spare wheel.

ⓘ If you have installed an emergency spare wheel or a spare wheel, the tire pressure monitoring system will not function for this wheel. The emergency spare wheel or spare wheel is not equipped with a sensor for the tire pressure monitoring system.

Installing and removing the spare wheel

Vehicles with rear-wheel drive: removing the spare wheel (Cargo Van or Tourer)

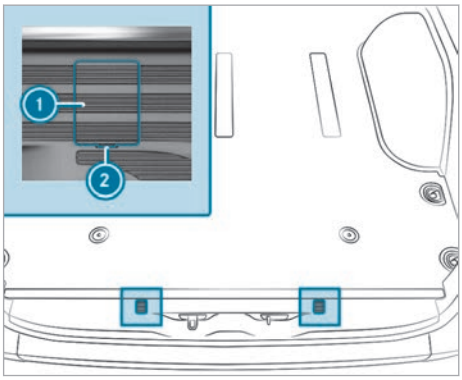

Bolt covers for the retaining hooks (example: Cargo Van)

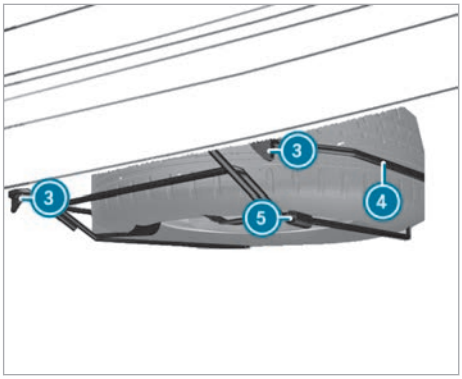

- Open the rear-end doors.
- Place a screwdriver into recesses (2) and pry off covers (1).
- Using the wheel wrench from the vehicle tool kit, unscrew the now visible bolts counter-clockwise by approximately 20 turns.
- Slightly raise spare wheel carrier (4) and unhook left-hand retaining hook (3).
- Assemble the pump lever for the jack and slide it into sleeve (5) on the right-hand side of spare wheel carrier (4).
- Raise spare wheel carrier (4) with the pump lever and unhook right-hand retaining hook (3).
- Slowly lower spare wheel carrier (4) to the ground.
- Lift spare wheel carrier (4) slightly and pull the pump lever out of the sleeve.
- Use the pump lever to lift the spare wheel beyond the rear edge of spare wheel carrier (4).
- Carefully remove the spare wheel from spare wheel carrier (4). The spare wheel is heavy. When the spare wheel is removed, the center of gravity changes due to the heavy weight of the wheel. The spare wheel may slip down or tip over.

Vehicles with rear-wheel drive: installing the spare wheel (Cargo Van or Tourer)

- Carefully place the spare wheel onto spare wheel carrier (4). The spare wheel is heavy. When you place the spare wheel onto spare wheel carrier (4), the center of gravity changes due to the weight of the wheel. The spare wheel may slip down or tip over.
- Slide the pump lever for the jack into sleeve (5) on spare wheel carrier (4).
- Raise spare wheel carrier (4) with the pump lever and attach right-hand retaining hook (3).
- Slightly raise spare wheel carrier (4) and attach left-hand retaining hook (3).
- Pull the pump lever out of sleeve (5).
- Using the wheel wrench, tighten the bolts for retaining hooks (3) by turning them clockwise.
- Replace and engage covers (1).
- Close the rear-end doors.

Vehicles with rear-wheel drive: removing the spare wheel (vehicle with lowered chassis)

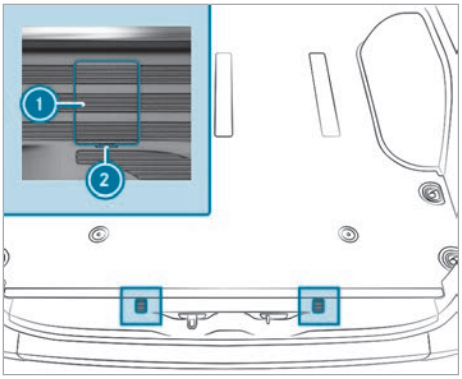

Bolt covers for the retaining hooks (example: Cargo Van)

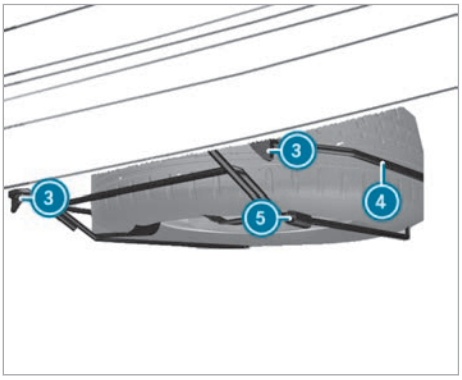

- Open the rear-end doors.
- Place a screwdriver into recesses (2) and pry off covers (1).
- Using the wheel wrench from the vehicle tool kit, unscrew the now visible bolts counter-clockwise by approximately 20 turns.
- Slightly raise spare wheel carrier (4) and unhook left-hand retaining hook (3).
- Assemble the pump lever for the jack and slide it into sleeve (5) on the right-hand side of spare wheel carrier (4).
- Raise the spare wheel carrier with the pump lever and unhook right-hand retaining hook (3).
- Prepare the jack.
- Place the jack beneath the corresponding jack support point.
- Move the pump lever up and down until the tire is raised a maximum of 1.18 in (3 cm) off the ground.
- Carefully remove the spare wheel from spare wheel carrier (4). The spare wheel is heavy. When the spare wheel is removed, the center of gravity changes due to the heavy weight of the wheel. The spare wheel may slip down or tip over.
- Install the spare wheel on the vehicle.
- Lower the vehicle.

Vehicles with rear-wheel drive: installing the spare wheel (vehicle with lowered chassis)

ⓘ In the event of a flat tire, you may only store the defective wheel inside the vehicle. An intact wheel may be stored in the spare wheel carrier only when the vehicle is unladen. A laden vehicle must first be raised.

- Carefully place the spare wheel onto spare wheel carrier (4). The spare wheel is heavy. When you place the spare wheel onto spare wheel carrier (4), the center of gravity changes due to the weight of the wheel. The spare wheel may slip down or tip over.
- Slide the pump lever for the jack into sleeve (5) on spare wheel carrier (4).
- Raise spare wheel carrier (4) with the pump lever and attach right-hand retaining hook (3).
- Slightly raise spare wheel carrier (4) and attach left-hand retaining hook (3).
- Pull the pump lever out of sleeve (5).
- Using the wheel wrench, tighten the bolts for retaining hooks (3) by turning them clockwise.
- Replace and engage covers (1).
- Close the rear-end doors.

Vehicles with rear-wheel drive: removing the spare wheel (chassis)

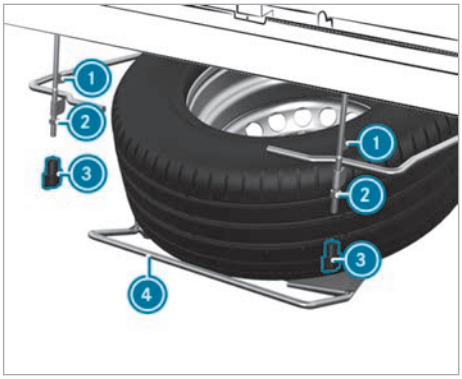

- Loosen thumb nuts 3 manually and remove them.
- Loosen nuts 2 as far as the thread end.
- Slightly raise spare wheel carrier 4 and unhook left-hand retaining hook 1.
- Assemble the pump lever for the jack and slide it into the sleeve on the right-hand side of spare wheel carrier 4.
- Raise spare wheel carrier 4 with the pump lever and unhook right-hand retaining hook 1.
- Slowly lower spare wheel carrier 4 to the ground.
- Lift spare wheel carrier 4 slightly and pull the pump lever out of the sleeve.
- Use the pump lever to lift the spare wheel beyond the rear edge of the spare wheel carrier.
- Carefully remove the spare wheel from the spare wheel carrier. The spare wheel is heavy. When the spare wheel is removed, the center of gravity changes due to the heavy weight of the wheel. The spare wheel may slip down or tip over.

Vehicles with rear-wheel drive: installing the spare wheel (chassis)

- Carefully place the spare wheel onto spare wheel carrier 4. The spare wheel is heavy. When you place the spare wheel onto the spare wheel carrier, the center of gravity changes due to the weight of the wheel. The spare wheel may slip down or tip over.
- Slide the pump lever for the jack into the sleeve on spare wheel carrier 4.
- Raise spare wheel carrier 4 with the pump lever and attach right-hand retaining hook 1.
- Slightly raise the spare wheel carrier and attach left-hand retaining hook 1.
- Pull the pump lever out of the sleeve.
- Tighten nuts 2.
- Put thumb nuts 3 in place and tighten them.

Information on the technical data

The given data only applies to vehicles with standard equipment. You can obtain further information at a qualified specialist workshop.

On-board electronics

Notes on work on the engine electronics

NOTES Premature wear through improper maintenance

Improper maintenance may cause vehicle components to wear more quickly and the vehicle's operating permit may be invalidated.

- Always have work on the engine electronics and related components carried out at a qualified specialist workshop.

Two-way radios

Installation notes for two-way radios

WARNING Risk of accident due to improper work on two-way radios

If two-way radios are manipulated or retrofitted incorrectly, the electromagnetic radiation from the two-way radios can interfere with the vehicle electronics and jeopardize the operating safety of the vehicle.

- You should have all work on electrical and electronic components carried out at a qualified specialist workshop.

WARNING Risk of accident due to improper operation of two-way radios

If you use two-way radios in the vehicle improperly, their electromagnetic radiation can disrupt the vehicle's electronics. This is the case in the following situations, in particular:

- The two-way radio is not connected to an exterior antenna.
- The exterior antenna is installed incorrectly or is not a low-reflection antenna.

This could jeopardize the operating safety of the vehicle.

- Have the low-reflection exterior antenna installed at a qualified specialist workshop.
- When operating two-way radios in the vehicle, always connect them to the low-reflection exterior antenna.

NOTE Invalidation of the operating permit due to failure to comply with the instructions for installation and use

The operating permit may be invalidated if the instructions for installation and use of two-way radios are not observed.

- Only use approved frequency bands.
- Observe the maximum permissible output power in these frequency bands.
- Only use approved antenna positions.

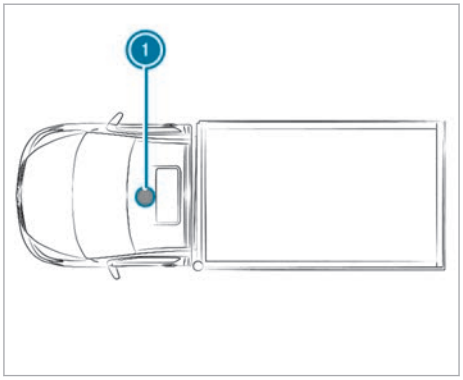

Cab Chassis (standard cab)

1 Front roof area

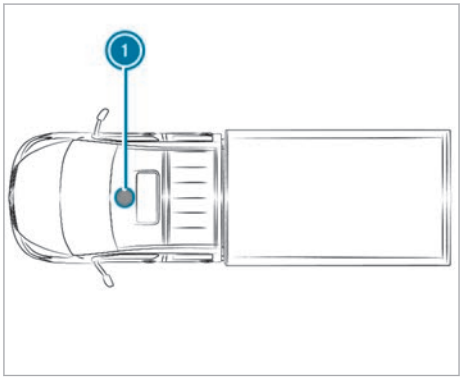

Cab Chassis (crewcab)

1 Front roof area

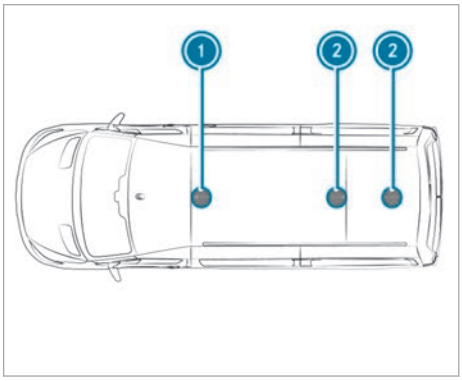

Cargo Van

1 Front roof area

2 Rear roof area

Use Technical Specification ISO/TS 21609 (Road Vehicles - EMC guidelines for installation of aftermarket radio frequency transmitting equipment) when retrofitting two-way radios. Comply with the legal requirements for detachable parts.

If your vehicle has pre-installation for two-way radio equipment, use the power supply or antenna connections intended for use with the pre-installation. Observe the manufacturer's supplements during installation.

Transmission output of two-way radios

The maximum transmission outputs (PEAK) at the base of the antenna must not exceed the values in the following table:

Frequency band and maximum transmission output

Frequency band	Maximum transmission output
2 -m- frequency band 144 – 174 MHz	50 W
4-m-frequency band 74 – 88 MHz	30 W
Terrestrial Trunked Radio (TETRA) 380 – 460 MHz	10 W
Mobile telephony 2G	2 W
Mobile telephony 3G/4G/5G	0.5 W

There are no restrictions on use of the following devices in the vehicle:

- Two-way radios with a maximum transmission output of up to 100 mW
- Two-way radios with transmitter frequencies in the 380–410 MHz frequency band and a maximum transmission output of up to 2 W (trunked radio system/Tetra)
- Mobile phones (2G/3G/4G/5G)

There are no restrictions on positioning the antenna on the outside of the vehicle for the following frequency bands:

- Terrestrial Trunked Radio (TETRA)
- 2G/3G/4G/5G

Radio regulations

Regulatory radio identifiers and specific information

Manufacturer information about wireless vehicle components can be found using the key phrase "Regulatory radio information" in the Digital Operator's Manual in the vehicle, online and in the app.

Further information and updates are available at the following web address:

https://regulatoryradioinformation.corpinter.net/vans/us

Information regarding the specific absorption rate (SAR)

Information regarding the specific absorption rate (SAR) can be found using the key phrase "Regulatory radio information" in the Digital Operator's Manual in the vehicle, on the Internet and in the app.

Further information and updates are available at the following web address:

https://regulatoryradioinformation.corpinter.net/vans/us

Vehicle identification plate, vehicle identification number (VIN) and engine number

Vehicle identification plate

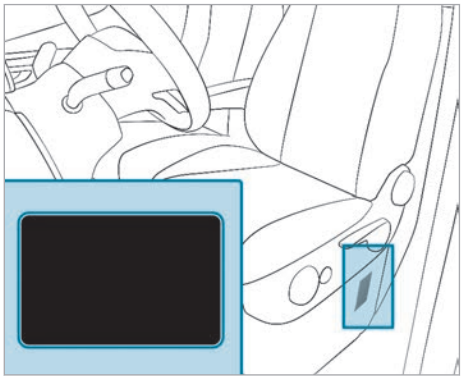

Vehicle identification plate (example: USA)

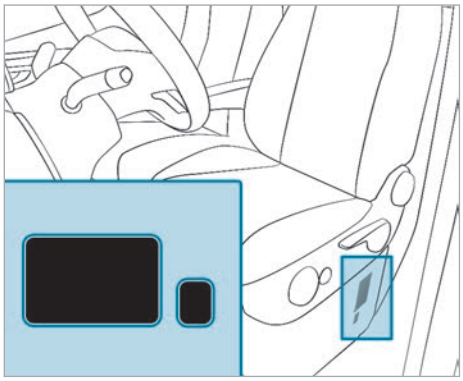

Vehicle identification plate (example: Canada)

Depending on the vehicle model, the vehicle identification plate is located on the seat box of the driver's seat or on the B-pillar.

ⓘ The data is vehicle-specific and may differ from that shown. Always observe the specifications on your vehicle identification plate.

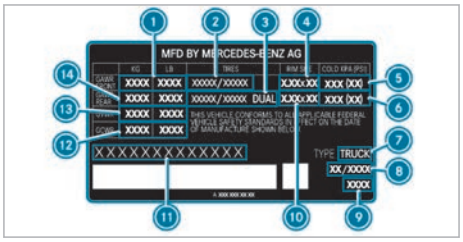

Vehicle identification plate (example: USA, complete vehicles)

1. Maximum permissible front axle load
2. Front tire size
3. Rear tire size
4. Front wheel size
5. Recommended tire pressure front (when cold)
6. Recommended tire pressure rear (when cold)
7. Vehicle model
8. Manufacturing date
9. Paint code
10. Rear wheel size
11. VIN (vehicle identification number)
12. Permissible gross mass of vehicle combination
13. Permissible gross mass
14. Maximum permissible rear axle load

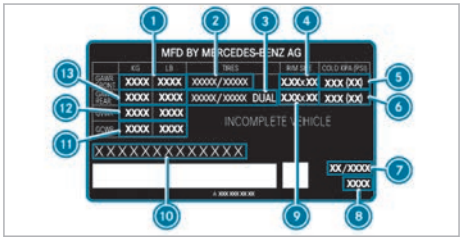

Vehicle identification plate (example: USA, incomplete vehicles)

1. Maximum permissible front axle load
2. Front tire size
3. Rear tire size
4. Front wheel size
5. Recommended tire pressure front (when cold)
6. Recommended tire pressure rear (when cold)
7. Manufacturing date
8. Paint code
9. Rear wheel size

⑩ VIN (vehicle identification number)
⑪ Permissible gross mass of vehicle combination
⑫ Permissible gross mass
⑬ Maximum permissible rear axle load

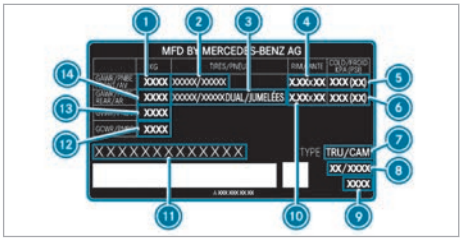

Vehicle identification plate (example: Canada, complete vehicles)

① Maximum permissible front axle load
② Front tire size
③ Rear tire size
④ Front wheel size
⑤ Recommended tire pressure front (when cold)
⑥ Recommended tire pressure rear (when cold)
⑦ Vehicle model
⑧ Manufacturing date
⑨ Paint code
⑩ Rear wheel size
⑪ VIN (vehicle identification number)
⑫ Permissible gross mass of vehicle combination
⑬ Permissible gross mass
⑭ Maximum permissible rear axle load

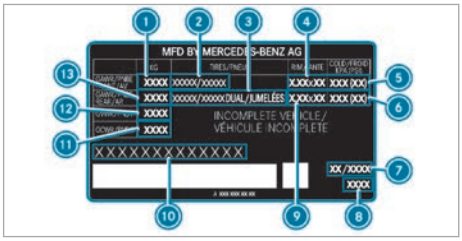

Vehicle identification plate (example: Canada, incomplete vehicles)

① Maximum permissible front axle load
② Front tire size
③ Rear tire size
④ Front wheel size
⑤ Recommended tire pressure front (when cold)
⑥ Recommended tire pressure rear (when cold)
⑦ Manufacturing date
⑧ Paint code
⑨ Rear wheel size
⑩ VIN (vehicle identification number)
⑪ Permissible gross mass of vehicle combination
⑫ Permissible gross mass
⑬ Maximum permissible rear axle load

The permissible gross mass comprises the vehicle weight, all vehicle occupants, the fuel and the load. The maximum permissible axle load is the maximum weight that can be carried by one axle (front- or rear axle).

Do not exceed the permissible gross mass or the maximum permissible axle load of the front- or rear axle.

The vehicle identification plate may also include the following data:

- Payload
- Kerb weight
- Number of passenger seats

Canada only: the following plate can be found alongside the vehicle identification plate (depending on the body status).

Plate confirming the national emissions guidelines and safety requirements for motor vehicles (example - Canada complete vehicles)

Plate confirming the national emissions guidelines (example - Canada incomplete vehicles)

VIN engraved underneath the hood

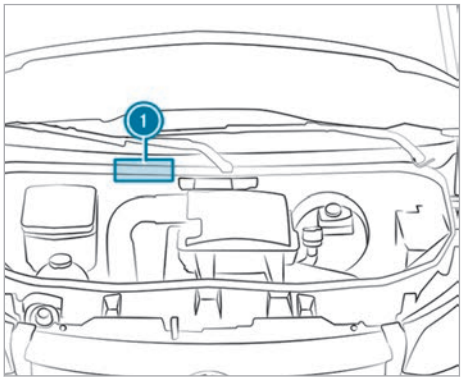

Engraved VIN (1) is located underneath the hood.

VIN on lower section of windshield

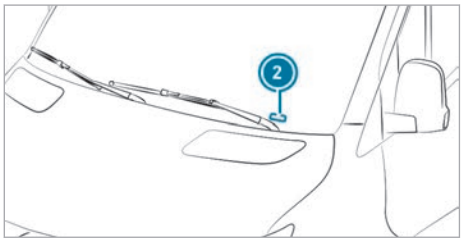

The VIN is also attached as a label on the lower section of the windshield (2).

Emission Control Information label

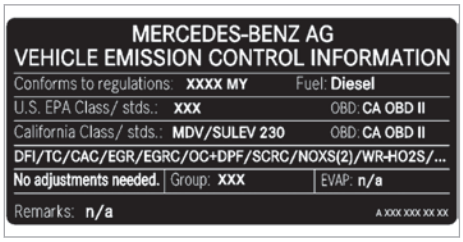
MERCEDES-BENZ AG
VEHICLE EMISSION CONTROL INFORMATION
Conforms to regulations: XXXX MY Fuel: Diesel
U.S. EPA Class/ stds.: XXX OBD: CA OBD II
California Class/ stds.: MDV/SULEV 230 OBD: CA OBD II
DFI/TC/CAC/EGR/EGRC/OC+DPF/SCRC/NOXS(2)/WR-HO2S/...
No adjustments needed. Group: XXX EVAP: n/a
Remarks: n/a
A XXX XXX XX XX

Example: Emission Control Information label

ⓘ The data is vehicle-specific and may differ from that shown.

Engine number

The engine number is stamped onto the crankcase. More detailed information can be obtained at a qualified specialist workshop.

Operating fluids and capacities

Notes on operating fluids

⚠ **WARNING** Risk of injury due to harmful operating fluids

Operating fluids can be toxic.

- ▶ When using, storing and disposing of operating fluids, observe the imprints on the respective original containers.
- ▶ Always keep operating fluids in the sealed original container.
- ▶ Always keep children away from operating fluids.

ENVIRONMENTAL NOTE Pollution of the environment due to irresponsible disposal of operating fluids

Incorrect disposal of operating fluids can cause considerable damage to the environment.

- ▶ Dispose of operating fluids in an environmentally responsible manner.

Operating fluids include the following:

- Fuels
- Exhaust gas aftertreatment additives, e.g.DEF®
- Lubricants
- Coolant
- Brake fluid
- Windshield washer fluid
- Climate control system refrigerant

Only use products which have been approved for your vehicle by Mercedes-Benz. Damage caused to the vehicle by using products that have not been approved is not covered by the Mercedes-Benz warranty or goodwill gestures.

You can identify operating fluids approved by Mercedes-Benz by the following labels on the container:

- MB-Freigabe (e.g. MB-Freigabe 229.51)
- MB-Approval (e.g. MB-Approval 229.51)

Further information on approved operating fluids is available from the following sources:

- In the MB Specifications for operating fluids at https://operatingfluids.mercedes-benz.com (with details of specification).
- At a qualified specialist workshop

WARNING Risk of fire or explosion from fuel

Fuels are highly flammable.

- ▶ Fire, open flames, smoking and creating sparks must be avoided.
- ▶ Before refueling, switch off the vehicle and, if installed, the stationary heater, and leave them switched off during refueling.

WARNING Risk of injury from fuels

Fuels are poisonous and hazardous to your health.

- ▶ Do not swallow fuel or let it come into contact with skin, eyes or clothing.
- ▶ Do not inhale fuel vapor.
- ▶ Keep children away from fuel.
- ▶ Keep doors and windows closed during the refueling process.

If you or other people come into contact with fuel, observe the following:

- ▶ Immediately rinse fuel off your skin with soap and water.
- ▶ If fuel comes into contact with your eyes, immediately rinse them thoroughly with clean water. Seek medical attention immediately.
- ▶ If you swallow fuel, seek medical attention immediately. Do not induce vomiting.
- ▶ Change immediately out of clothing that has come into contact with fuel.

Fuel

Notes on fuel grades for vehicles with gasoline engine

Observe the notes on operating fluids (→ page 282).

NOTE Do not use diesel to refuel vehicles with a gasoline engine

If you have accidentally refueled with the wrong fuel:

- Do not switch on the vehicle. Otherwise fuel can enter the engine.

  Even small amounts of the wrong fuel could result in damage to the fuel system and the engine. The repair costs are high.

- ▶ Consult a qualified specialist workshop.
- ▶ Have the fuel tank and fuel lines drained completely.

Refuel only using low-sulfur regular fuel with an octane number of at least 87 AKI/91 RON.

ⓘ E10 fuel contains up to 10% ethanol as an additive. Your vehicle is suitable for use with E10 fuel. You can fuel your vehicle with E10 fuel.

NOTE Damage caused by the wrong fuel

Even small amounts of the wrong fuel could result in damage to the fuel system, engine and exhaust system.

- ▶ Only refuel with the recommended fuel.

NOTE Damage caused by the wrong fuel

Even small amounts of the wrong fuel could result in damage to the fuel system, engine and exhaust system.

Never refuel with the following:

- Diesel
- Gasoline with more than 10% ethanol by volume, e.g. E15, E20, E85, E100
- Gasoline with more than 3% methanol by volume, e.g. M15, M30, M85, M100
- Gasoline with additives containing metal

- ▶ Do not mix such fuels with the fuel recommended for your vehicle.

ⓘ To ensure the longevity and performance of the engine, only regular unleaded gasoline may be used.
Note that you can refuel with higher-quality premium-grade gasoline at any time.

If you are using drums or canisters to refuel the vehicle, you should filter the fuel before filling. This

will prevent malfunctions in the fuel system caused by contaminated fuel.

You will usually find information about the fuel quality on the fuel dispenser. If there is no identification on the fuel dispenser, consult a gas station attendant.

ⓘ For further information, contact a qualified specialist workshop or visit http://www.mbusa.com (USA only).

Notes on additives in gasoline

Observe the notes on operating fluids (→ page 282).

NOTE Damage from use of unsuitable additives

Even small amounts of the wrong additive may lead to malfunctions.

▶ Only add cleaning additives recommended for Mercedes-Benzto the fuel.

Mercedes-Benz recommends using brand-name fuels with additives.

In some countries, the available fuel may not contain sufficient amounts of additives. Deposits could build up in the fuel injection system as a result.

In this case, in consultation with a authorized Mercedes-Benz Center, the fuel should be mixed with the cleaning additive recommended by Mercedes-Benz.

You must observe the notes and mixing ratios indicated on the tank.

Notes on fuel quality for vehicles with diesel engines

General notes

Observe the notes on operating fluids (→ page 282).

WARNING Risk of fire from fuel mixture

If you mix diesel fuel with gasoline, the flash point of the fuel mixture is lower than that of pure diesel fuel.

▶ Never refuel using gasoline in diesel engines.

▶ Never mix gasoline with diesel fuel.

NOTE Damage due to incorrect fuel

Even small amounts of the wrong fuel could result in damage to the fuel system, the engine and the emission control system.

Never refuel with the following:

- Gasoline
- Marine diesel
- Heating oil
- Pure fatty acid methyl ester (bio-diesel) or vegetable oil
- Paraffin or kerosene

▶ Do not mix such fuels with diesel fuel and do not use any additive.

If you have accidentally refueled with the wrong fuel, observe the following:

▶ Do not switch the ignition on.

▶ Consult a qualified specialist workshop.

NOTE Malfunctions due to contaminated fuel

Impurities in the fuel can lead to malfunctions in the fuel system.

▶ When refueling the vehicle from drums or canisters, filter the fuel before filling.

NOTE Damage due to incorrect fuel

Incorrect fuel can lead to engine damage.

▶ Refuel only ULSD or diesel fuel with a sulfur content of maximum 15 ppm.

You will usually find information about the fuel quality on the fuel dispenser. If there is no identification on the fuel dispenser, consult a gas station attendant.

The fuel quality recommended for your vehicle is found on the information label in the fuel filler flap (→ page 133).

Notes on low outside temperatures

WARNING Risk of fire and explosion from igniting fuel

If you heat up parts of the fuel system, fuel may leak and ignite. Depending on the type of damage, fuel might not escape until the engine is running.

- Never heat fuel system components.
- Contact a qualified specialist workshop to rectify the malfunction.

Refill only with commercially available ULTRA-LOW SULFUR DIESEL (ULSD, maximum sulfur content 15 ppm) that fulfills the ASTM D975 standard.

The flow properties of diesel fuel may be inadequate at low outside temperatures due to paraffin separation.

ⓘ Malfunctions resulting from paraffin separation can be rectified only by heating the entire fuel system. Park the vehicle in a heated garage, for example.

To prevent malfunctions, diesel fuel with improved flow characteristics is available in the winter months. You can obtain further information on this at the gas station or from your fuel supplier.

Your vehicle is equipped with a fuel preheating system. This additionally improves the flow characteristics of the diesel fuel by about 14.5 °F (8 °C). ULTRA-LOW SULFUR DIESEL can therefore be used without risk of malfunction down to an outside temperature of approximately 14.5 °F (-10 °C).

! **NOTE** Damage due to gasoline or paraffin

Gasoline or paraffin in diesel fuel impairs the lubricity of the diesel fuel. This can result in damage to the diesel injection system, for example.

- Do not add any gasoline or paraffin to diesel fuel to improve its flow characteristics.

B20 fuels with bio-diesel content

! **NOTE** Reduced engine output due to fuel with increased bio-contents

The fuel filter may become clogged if fuels with a bio-diesel content of more than 5% (B20 fuels) are used on an ongoing basis. Deposits may also form on the fuel injector. This can reduce engine output. Unburned fuel may get into the oil pan. This can cause the engine oil level to rise.

Observe the following points if you operate your vehicle with fuels with increased bio-contents > 5% on an ongoing basis:

- If possible, fill up with fuels with bio-contents up to 5% (ULSD).
- If you regularly refuel with B20 fuels, check the engine oil level regularly.
- Observe the oil change intervals specified on the instrument cluster and in your service booklet.
- Use only approved engine oils and filters.
- If you do not plan to drive the vehicle for several weeks, fill the fuel tank completely with ULSD fuel beforehand.

For more information, consult the gas station staff. The identification of fuels with bio-diesel content (ULSD or B20) must be clear. If the identification is not clear, do not refuel. Do not refuel with any fuels that have not been approved for your vehicle.

Tank capacity and fuel reserve

The total capacity of the fuel tank may vary, depending on the vehicle equipment.

Total fuel tank capacity (gasoline engines)

Gasoline engine	Total capacity
M274	approx. 23 US gal (85 liters)

Fuel tank reserve (gasoline engines)

Gasoline engine	Reserve
M274	approx. 5 US gal (19 liters)

Total fuel tank capacity (diesel engines)

Diesel engine	Total capacity
OM654	approx. 25 US gal (93 liters) or approx. 19 US gal (71 liters)

Fuel tank reserve (diesel engines)

Diesel engine	Reserve
OM654	approx. 3 US gal (12 liters)

DEF® (vehicles with a diesel engine only)

Notes on DEF®

Observe the notes on operating fluids (→ page 282).

DEF® is a water-soluble liquid for the exhaust gas aftertreatment of diesel engines.

NOTE Irritation of skin, eyes and respiratory tract by DEF

DEF may be irritating if inhaled, swallowed or if it comes in contact with eyes or skin. When the tank is opened, ammonia vapors may escape.

- ▶ Do not inhale or swallow DEF.
- ▶ Avoid contact of DEF with skin, eyes or clothing.
- ▶ Keep DEF away from children.
- ▶ Only fill the DEF tank in well-ventilated areas.

If a person has come into contact with DEF, observe the following points:

- If DEF is swallowed, drink plenty of water and seek medical attention immediately.
- If DEF has gotten into the eyes, rinse the eyes with water for 15 minutes, also under the eyelids.
- Immediately rinse off DEF from the skin with water.

NOTE Damage caused by additives in DEF or by diluting DEF

The DEF exhaust gas aftertreatment system could be destroyed by the following:

- Additives in DEF
- Diluting DEF

- ▶ Only use DEF in accordance with ISO 22241.
- ▶ Do not mix additives.
- ▶ Do not dilute DEF.

NOTE Damage and malfunctions caused by impurities in DEF

Impurities in DEF result in the following:

- Higher emission values
- Damage to the catalytic converter
- Engine damage
- Malfunctions in the DEF exhaust gas aftertreatment system

- ▶ Avoid impurities in DEF.

ENVIRONMENTAL NOTE Soiling with DEF

DEF residue crystallizes after some time and stain the affected surfaces.

- ▶ Immediately rinse surfaces that come in contact with DEF when filling with water or remove DEF with a damp cloth and cold water.

If DEF has already crystallized, clean using a sponge and cold water.

If you open the DEF® tank, small amounts of ammonia vapor may be released. Do not inhale any ammonia vapor that may be released. Fill the DEF® tank only in well-ventilated areas.

Exhaust gas aftertreatment

The vehicle must be operated with DEF® if the exhaust gas aftertreatment system is to function correctly.

If you operate the vehicle without DEF® or with emissions-relevant malfunctions, the legal DOT approval is invalidated. The vehicle could be prohibited from public road use by an official order.

It may be improper or punishable in some countries to operate a vehicle that uses no DEF® or one that does not comply with the specifications of this Operator's Manual.

The engine management system monitors the exhaust gas aftertreatment components for compliance with emission standards and regulations. If you attempt to operate the vehicle without DEF®, with diluted DEF® or with a different reducing agent, this will be detected by the engine management system. Other emissions-relevant malfunctions, e.g. metering malfunctions or sensor errors, are also detected and logged.

The engine management system subsequently prevents the engine from being restarted after issuing a warning message.

Therefore, top up the DEF® tank regularly during vehicle operation or, at the latest, after receiving the first warning message via the instrument cluster.

DEF consumption and filling quantity

DEF consumption
As with fuel consumption, DEF consumption is highly dependent upon driving style and operating conditions. DEF consumption is usually within a range of 0 to 10 % of fuel consumption. If necessary, DEF must be topped up in accordance with the instructions when the refill message is displayed on the instrument cluster. This may also be required between scheduled maintenance.

Total capacity of DEF tank

Model	Total capacity
All models	5.8 gal (22 liters)

Engine oil

Notes on engine oil

Observe the notes on operating fluids (→ page 282).

NOTE Engine damage caused by an incorrect oil filter, incorrect oil or additives

- Do not use engine oils or oil filters other than those which meet the specifications necessary for the prescribed service intervals.
- Do not alter the engine oil or oil filter in order to achieve longer change intervals than prescribed.
- Do not use additives.
- Have the engine oil changed after the prescribed intervals.

Mercedes-Benz recommends having the oil changed at a qualified specialist workshop.

Further information on engine oil and oil filters:

- In the MB Specifications for operating fluids at https://operatingfluids.mercedes-benz.com (with details of specification).
- At a qualified specialist workshop

Engine oil quality and filling quantity

ⓘ The containers of the various engine oils are marked with the ACEA (Association of European Automotive Manufacturers) and/or API (America Petroleum Institute) classifications. Use only approved engine oils that correspond to the MB operating fluid specifications and the prescribed ACEA and/or API classifications named below. Engine oils of other grades are not permissible and may result in the loss of the New Vehicle Limited Warranty. The use of other engine oils not approved for diesel engines may damage the diesel particulate filter (DPF).

MB-Freigabe or MB-Approval (gasoline engines)

Gasoline engines	MB-Freigabe or MB-Approval
M274	229.5[1)]
1) recommended for lowest possible fuel consumption (lowest SAE viscosity class in each case; observe possible restrictions of the approved SAE viscosity classes)	

MB-Freigabe or MB-Approval (diesel engines)

Diesel engines	MB-Freigabe or MB-Approval
OM654	229.31, 229.51, 229.52, 229.71[1)]
1) recommended for lowest possible fuel consumption (lowest SAE viscosity class in each case; observe possible restrictions of the approved SAE viscosity classes)	

To achieve the lowest possible fuel consumption, it is recommended to use the engine oil specifications marked in the table for the lowest SAE viscosity class. Observe any possible restrictions of the approved SAE viscosity classes.

ⓘ If the engine oils listed in the table are not available, you may add a maximum 1.1 US qt (1.0 liter) of the following engine oils once only:
Vehicles with gasoline engine: MB-Freigabe or MB-Approval 229.3 or ACEA A3/B4

Vehicles with diesel engine: MB-Freigabe or MB-Approval 228.5, 229.3 or 229.5

Multigrade engine oils of the prescribed SAE viscosity class may be used all year round, taking the outside temperature into account.

Viscosity of the engine oil

NOTE Engine damage due to incorrect SAE classification (viscosity) of the engine oil

If the SAE classification (viscosity) of the engine oil added is not suitable for prolonged low outside temperatures, it may cause engine damage.

The temperature readings of the SAE classification are always based on fresh oil. Engine oil ages when driving as a result of soot and fuel residue. The characteristics of engine oil deteriorate significantly at low outside temperatures.

- Use an engine oil of the appropriate SAE classification at low outside temperatures.
- Use oil for all-year-round operation.

The temperature readings of the SAE viscosity class are always based on fresh oil. The temperature characteristics of the engine oil, especially at low outside temperatures, can deteriorate significantly owing to aging during driving operation.

Therefore, Mercedes-Benz recommends that you change the engine oil before the start of the cold season. Use only an approved engine oil in the prescribed SAE viscosity class for this purpose.

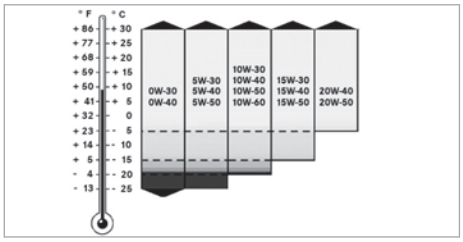

Viscosity indicates the flow characteristics of a fluid. With regard to engine oil, a high viscosity is synonymous with thick fluid and a low viscosity with thin fluid. Depending on the outside temperatures, select the engine oil according to the SAE viscosity class. The table shows the SAE viscosity classes to be used. The low temperature characteristics of engine oils can deteriorate significantly during operation, owing to e.g. aging, soot and fuel accretion. A regular oil change with an approved engine oil in the appropriate SAE viscosity class is therefore strongly recommended.

Additives

NOTE Engine damage due to use of additives in the engine oil

The use of additional additives in the engine oil can damage the engine.

- Do not use any additional additives in the engine oil.

Miscibility of engine oil

Mixing oil reduces the benefits of high-quality engine oils.

We recommend that you use only engine oil of the same grade and SAE viscosity class as the oil used at the last oil change. If, in exceptional cases, engine oil of the type in the engine is not available, use another approved mineral or synthetic engine oil.

Vehicles with diesel engines: If the grade is not available, you may also refill with engine oils according to MB-Freigabe or MB-Approval 228.5, 229.3 or 229.5. The top-up quantity will then be limited to a maximum of 1.1 US qt (1.0 liter).

Vehicles with gasoline engine: If the grade is not available, you may refill with engine oils according to MB-Freigabe or MB-Approval 229.3 or ACEA A3/B4. The top-up quantity will then be limited to a maximum of 1.1 US qt (1.0 liter).

You must then have an oil change carried out at the earliest possible opportunity.

Engine oils are differentiated between according to:

- Engine oil brand
- Grade (MB-Freigabe or MB-Approval)
- SAE viscosity class

Oil change interval

The on-board computer will automatically show the date of the next oil change as an event message on the display.

Mercedes-Benz recommends having the oil changed at a qualified specialist workshop.

Engine oil filling quantity

Engine	Filling quantity
M274	around 11.1 US qt (10.5 liters)
OM654	around 10.6 US qt (10.0 liters)

Information on oil consumption

Depending on your driving style, the vehicle will consume a maximum of 1.1 US qt (1.0 liter) of engine oil per 620 miles (1000 km).

In the following cases, oil consumption may also exceed this limit:

- The vehicle is new.
- You use the vehicle mostly under arduous operating conditions.
- You frequently drive at high engine speeds.

Regular maintenance is a prerequisite for favourable consumption figures. You can assess the oil consumption only after a long journey. Check the oil level in the engine regularly, e.g. weekly or every time you refuel.

Notes on brake fluid

Observe the notes on operating fluids (→ page 282).

WARNING Risk of an accident due to vapor pockets forming in the brake system

The brake fluid constantly absorbs moisture from the air. This lowers the boiling point of the brake fluid. If the boiling point is too low, vapor pockets may form in the brake system when the brakes are applied hard.

This causes the braking effect to be impaired.

▶ Have the brake fluid renewed at the specified intervals.

Have the brake fluid renewed every two years at a qualified specialist workshop.

NOTE Damage to paint, plastic or rubber by brake fluid

There is a risk of damage to property if brake fluid comes into contact with paint, plastic or rubber.

▶ If paint, plastic or rubber comes into contact with brake fluid, rinse with water immediately.

Observe the notes on paintwork/matte finish paintwork care (→ page 229).

Only use brake fluid approved by Mercedes-Benz in accordance with MB-Freigabe or MB-Approval 331.0.

Information on brake fluid is available at the following locations:

- In the MB Specifications for operating fluids 331.0 at https://operatingfluids.mercedes-benz.com
- At a qualified specialist workshop

Coolant

Notes on coolant

Observe the notes on operating fluids (→ page 282).

WARNING Risk of Fire and injury due to antifreeze

If antifreeze comes into contact with hot components in the engine compartment, it may ignite.

▶ Allow the vehicle to cool down before refilling with antifreeze.

▶ Make sure that antifreeze does not spill out over the filler neck.

▶ Before starting the vehicle, thoroughly clean the components contaminated with antifreeze.

NOTE Damage caused by incorrect coolant

▶ Only add coolant that has been premixed with the required antifreeze protection.

Information on coolant is available from the following sources:

- In the MB Specifications for operating fluids 320.1 at https://operatingfluids.mercedes-benz.com
- At a qualified specialist workshop

NOTE Overheating at high outside temperatures

If an inappropriate coolant is used, the engine cooling system is not sufficiently protected against overheating and corrosion at high outside temperatures.

- Always use coolant approved for Mercedes-Benz.
- Observe the instructions in the MB Specifications for operating fluids320.1.

NOTE Paintwork damage due to coolant

- Do not spill coolant on painted surfaces.

Have the coolant replaced regularly at a qualified specialist workshop.

Note the proportion of anticorrosion agent/antifreeze in the engine cooling system within the following temperature ranges:

- A minimum of 50 % (antifreeze protection down to about -35 °F (-37 °C))
- A maximum of 55 % (antifreeze protection down to -49 °F (-45 °C))

Coolant filling capacity

Coolant

Engine	Capacity
M274	Approx. 2.5 gal (9.6 liters)
OM654 (vehicles with 125 kW)	Approx. 3.0 gal (11.4 liters)
OM654 (vehicles with 155 kW)	Approx. 3.7 gal (14.0 liters)
OM654 with auxiliary heating	Approx. 4.3 gal (16.4 liters)

Windshield washer fluid

Notes on windshield washer fluid

Observe the notes on operating fluids (→ page 282).

WARNING - Risk of fire and injury from windshield washer concentrate

Windshield washer concentrate is highly flammable. It could ignite if it comes into contact with hot engine component parts or the exhaust system.

- Make sure that no windshield washer concentrate spills out next to the filler opening.

NOTE Damage to the exterior lighting due to unsuitable windshield washer fluid

Unsuitable windshield washer fluid may damage the plastic surface of the exterior lighting.

- Only use windshield washer fluid which is also suitable for use on plastic surfaces, e.g. MB SummerFit or MB WinterFit.

NOTE Blocked spray nozzles caused by mixing windshield washer fluids

- Do not mix MB SummerFit and MB WinterFit with other windshield washer fluids.

Do not use distilled or de-ionized water. Otherwise, the fill level sensor may be actuated erroneously.

Information on windshield washer fluid

Recommended windshield washer fluid:

- Above freezing point: e.g. MB SummerFit
- Below freezing point: e.g. MB WinterFit

Mixing ratio

For the correct mixing ratio, refer to the information on the anti-freeze container.

Mix the washer fluid with windshield washer fluid all year round.

Filling quantities

Windshield washer system

Washer fluid	5.8 qt (5.5 l)

Refrigerant

Notes on refrigerant

Observe the notes on operating fluids (→ page 282).

NOTE Damage due to incorrect refrigerant

If a non-approved refrigerant is used, the climate control system may be damaged.

- Use only R-1234yf refrigerant.

NOTE Damage to the climate control system due to incorrect refrigerant compressor oil

- Only use refrigerant compressor oil that has been approved by Mercedes-Benz.
- Do not mix the approved refrigerant compressor oil with a different refrigerant compressor oil.

The refrigerant system should only be serviced by trained technicians certified to SAE Standard J2845 to insure proper and safe operation.

All applicable provisions, as well as SAE Standard J639, must be observed in order to guarantee reliable and proper maintenance.

The air conditioning evaporator (cooling coil) shall never be repaired or replaced with one removed from a used or salvaged vehicle and that new replacement MAC evaporators shall be certified (and labeled) as meeting SAE Standard J2842 HFO-1234yf and R744 Design Criteria and Certification for OEM Mobile Air Conditioning Evaporator and Service Replacements.

The information label indicating the refrigerant type and the refrigerant compressor oil (PAG oil) on the climate control system is located inside the hood or at the front of the engine compartment.

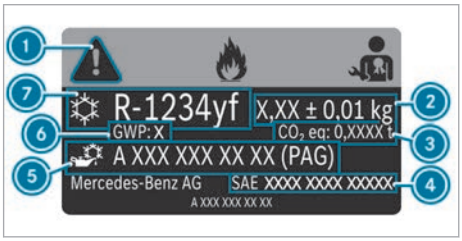

Information label (example)

1. Symbols for hazard and service information
2. Refrigerant filling quantity
3. CO_2 equivalent of the refrigerant used
4. Applicable standards
5. PAG oil part number
6. GWP (global warming potential) of the refrigerant used
7. Refrigerant type

Symbols and Definitions

Symbol Name	Reference	Graphic
Caution	ISO 7000 0434	
Air Conditioning System (MAC)	ISO 2575 001	
MAC System Lubricant Type (PAG POE)		
Requires Registered Technician to Service MAC system		
Flammable Refrigerant		

The symbols (1) indicate the following:

- Potential dangers
- Performance of maintenance work at a qualified specialist workshop

Refrigerant filling quantity

Missing values were not yet available at the time of going to press.

Filling quantities for refrigerant and PAG oil

Model	Refrigerant
All models	
Model	**PAG oil**
All models	

Vehicle data

Vehicle dimensions

The following section contains important technical data for your vehicle. Your vehicle documents contain further vehicle-specific and equipment-dependent technical data such as vehicle dimensions and weights.

Trailer hitch

Notes on the trailer hitch

⚠ **WARNING** Risk of accident due to impermissible attachment of a trailer tow hitch

If you install a trailer tow hitch or other components, the longitudinal frame member is weakened and can break. The trailer may become detached from the vehicle.

There is a risk of an accident.

Only retrofit a trailer tow hitch if permissible.

Observe the notes on trailer operation (→ page 179).

Retrofitting a trailer hitch is only permissible if a towing capacity is specified in your vehicle documents.

You can obtain further information on the trailer hitch at a qualified specialist workshop.

Mercedes-Benz recommends that you have a trailer hitch retrofitted at an authorized Mercedes-Benz Center.

Only use a trailer hitch which has been tested and specially approved by Mercedes-Benz for your vehicle.

Use only a ball neck that has been approved for your vehicle and for your Sprinter trailer hitch. Notes on the permissible dimensions of the ball neck can also be found on the identification plate of the trailer hitch.

The maximum permissible towing capacity for unbraked trailers is 1,653 lbs (750 kg).

Trailer loads

The permissible weights and loads can also be obtained from the following sources of information:

- Vehicle documents
- The identification plates of the trailer hitch, trailer and vehicle

The values approved by the manufacturer can be found in the following table. If the figures differ, the lowest figure applies. Use calibrated scales to check compliance with weight restrictions before you start your journey.

Maximum permissible weights and loads
Vehicle type, gross vehicle weight and curb weight

Vehicle model	Gross vehicle weight rating (GVWR)	Permissible curb weight[7)]
1500	8,550 lbs (3.878 t)	6,950 lbs (3.152 t) (gasoline only)
2500	8,550 lbs (3.878 t)	7,400 lbs (3.357 t) (diesel only)
	9,050 lbs (4.105 t)	6,450 lbs (2.926 t) (gasoline only)
		7,400 lbs (3.357 t) (diesel only)
	9,480 lbs (4.300 t)	7,400 lbs (3.357 t) (diesel only)
3500	9,900 lbs (4.490 t) (Canada only)	7,400 lbs (3.357 t)
	9,989 lbs (4.531 t) (USA only)	
3500 XD	11,030 lbs (5.003 t)	10,470 lbs (4.749 t)
4500	12,125 lbs (5.500 t)	9,375 lbs (4.252 t)

[7)] Maximum permissible curb weight of a vehicle in ready-to-drive condition without driver or vehicle occupants, including all fluids and their reservoirs when filled up to 100%.

Front axle load, rear axle load, gross weight of vehicle combination (standard, optional)
Vehicle types 1500 and 2500 with a maximum gross vehicle weight rating of 8,550 lbs (3.878 t), 9,050 lbs (4.105 t) and 9,480 lbs (4.300 t)

Gross axle weight rating (GAWR), front axle (FA)	Gross axle weight rating (GAWR), rear axle (RA)
4,100 lbs (1.860 t) [5)]	5,360 lbs (2.431 t)
4,410 lbs (2.000 t) [1)]	

Vehicle type 3500 with a maximum gross vehicle weight rating of 9,900 lbs (4.490 t) (Canada only) and 9,989 lbs (4.531 t) (USA only)

Gross axle weight rating (GAWR), front axle (FA)	Gross axle weight rating (GAWR), rear axle (RA)
4,080 lbs (1.851 t) [5)]	7,060 lbs (3.202 t)
4,410 lbs (2.000 t) [1)]	

Vehicle type 3500 XD with a maximum gross vehicle weight rating of 11,030 lbs (5.003 t)

Gross axle weight rating (GAWR), front axle (FA)	Gross axle weight rating (GAWR), rear axle (RA)
4,080 lbs (1.851 t) [5]	7,720 lbs (3.502 t)
4,410 lbs (2.000 t) [1]	

Vehicle type 4500 with a maximum gross vehicle weight rating of 12,125 lbs (5.500 t)

Gross axle weight rating (GAWR), front axle (FA)	Gross axle weight rating (GAWR), rear axle (RA)
4,630 lbs (2.100 t)	7,935 lbs (3.599 t)

[1] Front axle with increased load capacity.

[5] Not in combination with all-wheel drive (AWD) and not in combination with vehicle model designation 907.745 (crewbuses with a vehicle length of 290 inches (7,367 mm))

Gross vehicle combination weight, trailer load, tongue weight
Vehicle types 1500 and 2500 with a maximum gross vehicle weight rating of 8,550 lbs (3.878 t)

Gross combined weight rating (GCWR) [6], [9]	Gross trailer weight (GTW), braked [6]	Tongue weight rating (TWR)
13,550 lbs (6.146 t)	5,000 lbs (2.268 t) [2]	500 lbs (0.227 t) [2]

Vehicle type 2500 with a maximum gross vehicle weight rating of 9,050 lbs (4.105 t)

Gross combined weight rating (GCWR) [6], [9]	Gross trailer weight (GTW), braked [6]	Tongue weight rating (TWR)
13,930 lbs (6.319 t)	5,000 lbs (2.268 t) [2]	500 lbs (0.227 t) [2]

Vehicle type 2500 with a maximum permissible gross weight of 9,480 lbs (4.300 t)

Gross combined weight rating (GCWR) [6], [9]	Gross trailer weight (GTW), braked [6]	Tongue weight rating (TWR)
9,480 lbs (4.300 t)	–	–

Vehicle type 3500 with a maximum gross vehicle weight rating of 9,900 lbs (4.490 t) (Canada only)

Gross combined weight rating (GCWR) [6], [9]	Gross trailer weight (GTW), braked [6]	Tongue weight rating (TWR)
14,900 lbs (6.759 t) [2], only for vehicle model designation 907.657 [8]	5,000 lbs (2.268 t) [2], only for vehicle model designation 907.657 [8]	500 lbs (0.227 t) [2], only for vehicle model designation 907.657 [8]
15,250 lbs (6.917 t) [3], not for vehicle model designation 907.657 [8]	7,500 lbs (3.402 t) [3], not for vehicle model designation 907.657 [8]	750 lbs (0.340 t) [3], not for vehicle model designation 907.657 [8]

Vehicle type 3500 with a maximum gross vehicle weight rating of 9,990 lbs (4.531 t) USA only)

Gross combined weight rating (GCWR) [6), 9)]	Gross trailer weight (GTW), braked [6)]	Tongue weight rating (TWR)
14,990 lbs (6.799 t) [2)], only for vehicle model designation 907.657 [8)]	5,004 lbs (2.270 t) [2)], only for vehicle model designation 907.657 [8)]	500 lbs (0.227 t) [2)], only for vehicle model designation 907.657 [8)]
15,250 lbs (6.917 t) [3)], not for vehicle model designation 907.657 [8)]	7,500 lbs (3.402 t) [3)], not for vehicle model designation 907.657 [8)]	750 lbs (0.340 t) [3)], not for vehicle model designation 907.657 [8)]

Vehicle type 3500 XD with a maximum gross vehicle weight rating of 11,030 lbs (5.003 t)

Gross combined weight rating (GCWR) [6), 9)]	Gross trailer weight (GTW), braked [6)]	Tongue weight rating (TWR)
15,250 lbs (6.917 t) [4)]	5,004 lbs (2.270 t) [2)], only for vehicle model designation 907.657 [8)]	500 lbs (0.227 t) [2)], only for vehicle model designation 907.657 [8)]
	optional: 7,500 lbs (3.402 t) [3)], not for vehicle model designation 907.657 [8)]	optional: 750 lbs (0.340 t) [3)], not for vehicle model designation 907.657 [8)]

Vehicle type 4500 with a maximum gross vehicle weight rating of 12,125 lbs (5.500 t)

Gross combined weight rating (GCWR) [6), 9)]	Gross trailer weight (GTW), braked [6)]	Tongue weight rating (TWR)
15,250 lbs (6.917 t) [4)]	5,004 lbs (2.270 t) [2)], only for vehicle model designation 907.657 [8)]	500 lbs (0.227 t) [2)], only for vehicle model designation 907.657 [8)]
	optional: 7,500 lbs (3.400 t) [3)], not for vehicle model designation 907.657 [8)]	optional: 750 lbs (0.340 t) [3)], not for vehicle model designation 907.657 [8)]

[2)] Only NAFTA trailer cross member, trailer load 5,004 lbs (2.270 t).

[3)] Only NAFTA trailer cross member, trailer load 7,500 lbs (3.400 t).

[4)] Only NAFTA trailer cross member, trailer load 5,004 lbs (2.270 t) or 7,500 lbs (3.400 t).

[6)] In trailer operation, do not exceed any individual maximum gross vehicle weight ratings specified in the table.

[8)] The vehicle length for vehicles with the vehicle model designation 907.657 (Cargo Van) is 290 inches (7,367 mm).

[9)] Any vehicle not equipped with a trailer coupling as standard cannot tow a trailer. In this case, the maximum gross vehicle weight rating will correspond to the maximum permissible gross weight for vehicle/trailer combination.

ⓘ If the trailer coupling is retrofitted, adapt the type plates accordingly with the altered maximum permissible weights. Please consult an authorized Mercedes-Benz Center if you have any further questions.

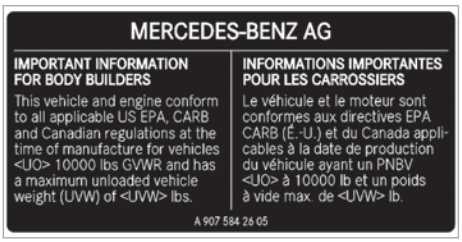
MERCEDES-BENZ AG

IMPORTANT INFORMATION FOR BODY BUILDERS

This vehicle and engine conform to all applicable US EPA, CARB and Canadian regulations at the time of manufacture for vehicles <UO> 10000 lbs GVWR and has a maximum unloaded vehicle weight (UVW) of <UVW> lbs.

INFORMATIONS IMPORTANTES POUR LES CARROSSIERS

Le véhicule et le moteur sont conformes aux directives EPA CARB (É.-U.) et du Canada applicables à la date de production du véhicule ayant un PNBV <UO> à 10000 lb et un poids à vide max. de <UVW> lb.

A 907 584 26 05

The bodybuilder label is found on the front-end module above the radiator and contains the vehicle's maximum permissible curb weight.

Cargo tie-down points and carrier systems

Loading capacity of the cargo tie-down points and tie-down eyes

! **NOTE** Risk of accident if the maximum loading capacity of the cargo tie-down points is exceeded

During maximum full-stop braking, for example, forces act that can multiply the weight force of the load.

- ▶ If various cargo tie-down points are combined to secure a load, always take the maximum loading capacity of the weakest cargo tie-down point into account.
- ▶ Always use several cargo tie-down points to distribute and spread the load. Distribute the load on the cargo tie-down points evenly.

The rated tensile force is the maximum permissible tensile force.

Further information on the cargo tie-down points and tie-down eyes can be obtained in the "Transporting" section (→ page 216).

Tie-down eyes

Rated tensile force of tie-down eyes

Tie-down eyes	Rated tensile force
Tourer	786.5 lbf (350 daN)
Cargo Van	1798.5 lbf (800 daN)

Loading rails

Rated tensile force of cargo tie-down points in the cargo compartment

Cargo tie-down point	Rated tensile force
Loading rail on cargo floor	1,124.0 lbf (500 daN)
Lower loading rail on side wall	449.6 lbf (200 daN)
Upper loading rail on side wall	281.0 lbf (125 daN)

The values specified apply only to loads resting on the cargo floor under the following conditions:

Conditions:

- The load is secured to two cargo tie-down points on the rail.
- The distance to the nearest load-securing point on the same rail is approximately 3 ft (1 m).

Information about roof luggage racks

⚠ **WARNING** Risk of injury if maximum roof load is exceeded

The vehicle center of gravity and the usual driving characteristics as well as the steering and braking characteristics will change.

If you exceed the maximum roof load, the handling as well as steering and braking characteristics are severely affected.

- ▶ Always comply with the maximum roof load and adjust your driving style.

⚠ **WARNING** Danger of accident due to uneven loading

The driving characteristics, as well as steering and braking characteristics, may be greatly impaired.

- ▶ Load the vehicle evenly.
- ▶ Secure the load against sliding.

The driving, braking and steering characteristics of the vehicle will change with the type of load, the weight and the center of gravity of the load.

NOTE Risk of accident if the maximum permissible roof load is exceeded

If the weight of the roof luggage, including the roof luggage rack, exceeds the maximum permissible roof load, there will be a risk of an accident.

- Ensure that the weight of the roof luggage and roof luggage rack does not exceed the maximum permissible roof load.
- The roof luggage rack supports must be arranged at an even distance from each other.

Further information about safety measures can be found in the "Transport" section (→ page 216).

Max. roof load/pairs of roof luggage rack supports

Vehicles with	Maximum roof load	Minimum number of pairs of supports
Roof	661 lbs (300 kg)	6
High roof	331 lbs (150 kg)	3

This information applies if the load is distributed evenly across the entire roof area.

If the roof luggage rack is shorter, reduce the load proportionately. The maximum load per pair of roof luggage rack supports is 110 lbs (50 kg).

The loading guidelines and other information about load distribution and load securing can be found in the "Transport" section (→ page 216).

Display messages

Introduction

Notes on display messages

WARNING Risk of accident due to an instrument cluster malfunction

In the event of a failure or malfunction of the instrument cluster, you will not recognize limitations in the functions of systems relevant to safety. This may impair operating safety.

▶ Park the vehicle safely as soon as possible and notify a qualified specialist workshop.

The on-board computer shows messages and warnings from specific systems on the instrument cluster display. Ensure that your vehicle is operating safely at all times.

Display messages with graphic symbols may appear in simplified form in the Operator's Manual and may differ from the symbols in the instrument cluster. The instrument cluster shows high-priority display messages in red. A warning tone will also sound for specific display messages.

Act in accordance with the display messages and follow the additional notes in this Operator's Manual.

In addition, symbols are shown for some display messages:

- ⓘ Further information
- [×] Hiding display messages

You can select the respective symbol by swiping left or right on the left-hand Touch Control. Press ⓘ to display further information on the media display. Pressing [×] hides the display message.

You can hide display messages to be acknowledged by pressing the 'Back' button [↩] or with the left-hand Touch Control. The display messages will be saved to the message memory.

Rectify the cause of a display message as quickly as possible.

High-priority display messages cannot be hidden. The instrument cluster will show these display messages permanently until the cause of the display message has been rectified.

Calling up saved display messages

The on-board computer saves specific display messages to the message memory. You can call up the saved display messages. Use the buttons on the left control panel on the steering wheel.

▶ Select the Service menu by swiping to the left or right on the Touch Control.

▶ Swipe upwards or downwards on the Touch Control.
The bar will show the number of saved messages.

If there are no messages stored, the display will show No Messages.

▶ Confirm with the Touch Control and scroll through the stored messages by swiping upwards or downwards.

Occupant safety

Display messages	Possible causes/consequences and ▶ Solutions
 Left Window Air-bag Fault Service Required (example)	* The restraint system is malfunctioning (→ page 34). ⚠ **WARNING** Risk of injury or fatal injury due to a malfunction in the window curtain airbag The window curtain airbag might be triggered unintentionally or might not be triggered at all in the event of an accident. ▶ Have the window curtain airbag checked and repaired immediately at a qualified specialist workshop. ▶ Consult a qualified specialist workshop immediately.
 Restraint System Fault Service Required	* The restraint system is malfunctioning (→ page 34). ⚠ **WARNING** Risk of injury due to malfunctions in the restraint system Components in the restraint system may be activated unintentionally or not deploy as planned in an accident. ▶ Have the restraint system checked and repaired immediately at a qualified specialist workshop. Identifying a restraint system malfunction: • The restraint system warning lamp does not light up when the vehicle is switched on. • The restraint system warning lamp lights up continuously or repeatedly during a journey. ▶ Consult a qualified specialist workshop immediately.
 Front Left Fault Service Required (example)	* The restraint system is malfunctioning (→ page 34). ⚠ **WARNING** Risk of injury due to malfunctions in the restraint system Components in the restraint system may be activated unintentionally or not deploy as planned in an accident. ▶ Have the restraint system checked and repaired immediately at a qualified specialist workshop. Identifying a restraint system malfunction: • The restraint system warning lamp does not light up when the vehicle is switched on. • The restraint system warning lamp lights up continuously or repeatedly during a journey. ▶ Consult a qualified specialist workshop immediately.

Driving and driving safety systems

Display messages	Possible causes/consequences and ▶ Solutions
 Inoperative See Operator's Manual	* ABS and ESP® are malfunctioning. Other driving systems and driving safety systems (e.g. BAS) may also be malfunctioning. The brake system continues working with the normal effect. Braking distance may increase in an emergency braking situation. ⚠ **WARNING** Risk of skidding if ABS and ESP® are malfunctioning The wheels may block during braking and ESP® does not perform any vehicle stabilization. The steerability and braking characteristics are heavily impaired and the braking distance may increase. In addition, other driving safety systems are switched off. ▶ Drive on carefully. ▶ Have ABS and ESP® checked immediately at a qualified specialist workshop.
 Currently Unavailable See Operator's Manual	* ABS and ESP® are temporarily unavailable. Other driving systems and driving safety systems (e.g. BAS) may also be temporarily unavailable. The brake system continues working with the normal effect. Braking distance may increase in an emergency braking situation. ⚠ **WARNING** Risk of skidding if ABS and ESP® are malfunctioning The wheels may lock during braking and ESP® does not perform any vehicle stabilization. The steerability and braking characteristics are heavily impaired and the braking distance may increase. In addition, other driving safety systems are switched off. ▶ Drive carefully on a suitable stretch of road, making slight steering movements at a speed above 19 mph (30 km/h). ▶ If the display message does not disappear, consult a qualified specialist workshop immediately. Drive carefully.
 Inoperative See Operator's Manual	* ESP® is malfunctioning Other driving systems and driving safety systems (e.g. BAS) may also be malfunctioning. The brake system continues working with the normal effect. Braking distance may increase in an emergency braking situation. ⚠ **WARNING** Risk of skidding if ESP® is malfunctioning If ESP® is malfunctioning, ESP® cannot carry out vehicle stabilization. In addition, other driving safety systems are switched off. ▶ Drive on carefully.

Display messages	Possible causes/consequences and ▶ Solutions
	▶ Have ESP® checked at a qualified specialist workshop.
Currently Unavailable See Operator's Manual	* ESP® is temporarily unavailable. Other driving systems and driving safety systems may also be malfunctioning. ⚠ **WARNING** Risk of skidding due to ESP® malfunction If ESP® is unavailable, ESP® will not carry out vehicle stabilization. In addition, other driving safety systems are switched off. ▶ Drive with caution on a suitable stretch of road, executing slight steering movements at a speed above 19 mph (30 km/h). ▶ If the display message does not disappear, consult a qualified specialist workshop immediately. Proceed with caution if you continue driving in this situation.
EBD Inoperative See Operator's ManualInoperative See Operator's Manual	* EBD is unavailable due to a malfunction. This means that ABS, BAS, Hill Start Assist and ESP® as well as its driving safety systems, for example, are also unavailable. ATTENTION ASSIST is deactivated and other driving systems could be automatically deactivated. The brake system continues to function normally, but without the functions listed above. ⚠ **WARNING** Risk of skidding if EBD, ABS and ESP® are malfunctioning The wheels may block during braking and ESP® does not perform any vehicle stabilization. The steerability and braking characteristics are heavily impaired and the braking distance may increase. In addition, other driving safety systems are switched off. ▶ Drive on carefully. ▶ Have the brake system checked immediately at a qualified specialist workshop.
120 km/h Maximum Speed Exceeded	* For certain countries only: the maximum permissible speed has been exceeded. ▶ Drive more slowly.
Speed Limit (Winter Tires) XXX mph	* You have reached the maximum permissible stored speed for winter tires. It is not possible to exceed this speed.
ATTENTION ASSIST: Take a Break!	* Based on certain criteria, ATTENTION ASSIST has detected fatigue or increasing lapses in concentration on the part of the driver. A warning tone also sounds. ▶ If necessary, take a break. On long journeys, take regular and timely breaks that allow you to rest properly.

Display messages	Possible causes/consequences and ▶ Solutions
ATTENTION ASSIST Inoperative	* ATTENTION ASSIST has failed. ▶ Consult a qualified specialist workshop.
- - - mph	* Cruise control cannot be activated as not all activation conditions have been met. ▶ Observe the activation conditions for cruise control (→ page 152).
Cruise Control Inoperative	* Cruise control is malfunctioning. ▶ Consult a qualified specialist workshop.
DSR — km/h	* DSR has been switched on but is not active as you are driving at a speed greater than 11 mph (18 km/h). If you drive at a speed below 11 mph (18 km/h), DSR will automatically brake again to the set speed.
DSR Off	* DSR was deactivated. If it was not deactivated by the driver, e.g. due to a malfunction in the ESP®, a warning tone will also sound.
DSR Inoperative	* A warning tone also sounds. DSR is unavailable due to a malfunction. ▶ Consult a qualified specialist workshop.
HOLD Off	* The HOLD function has been deactivated. The vehicle has started skidding. A warning tone also sounds. ▶ Switch the HOLD function on again later (→ page 158). * The HOLD function has been deactivated. An activation condition will no longer be met when the brake pedal is depressed. A warning tone also sounds. ▶ Check the activation conditions of the HOLD function (→ page 157).
Traffic Sign Assist Inoperative	* Traffic Sign Assist is malfunctioning. ▶ Consult a qualified specialist workshop.
Traffic Sign Assist Currently Unavailable See Operator's Manual	* Traffic Sign Assist has been switched off and is temporarily inoperative. This may be due to the following causes: • The windshield is dirty in the camera's field of vision. • Visibility is impaired due to heavy rain, snow or fog. If the causes mentioned above no longer apply, the display message will disappear and Traffic Sign Assist will be operational once again.

Display messages	Possible causes/consequences and ▶ Solutions
	If the display message does not disappear: ▶ Stop in accordance with the traffic conditions. ▶ Secure the vehicle against rolling away. ▶ Clean the windshield.

Driver assistance systems

Display messages	Possible causes/consequences and ▶ Solutions
 Temporarily Unavailable Sensors Dirty	* Front and corner radar sensors (hereafter "sensors") are malfunctioning. Possible causes: • the sensors are dirty • heavy precipitation • extended country driving without other traffic, e.g. in the desert Driving systems and driving safety systems may be malfunctioning or temporarily unavailable. The brake system, steering and drive system will continue to function normally. ▶ Drive on carefully. Once the causes of the problem are no longer present, the driving systems and driving safety systems will be available again, and the corresponding symbols will be switched off. If the display message does not disappear: ▶ Stop in accordance with the traffic conditions. ▶ Clean all sensor covers from the outside (→ page 146). ▶ Restart the vehicle.
 Camera View Restricted See Operator's Manual	* The view of the multifunction camera is restricted. Possible causes: • Dirt on the windshield in the field of vision of the multifunction camera • Heavy precipitation or fog • Mist on the inside or outside of the windshield: in certain weather conditions, mist can form on the inside or outside of the windshield during cold times of the year in particular. ⓘ This mist on the windshield will be removed automatically within a short time with the aid of a heater. The restriction is temporary. Driving systems and driving safety systems may be malfunctioning or temporarily unavailable. The brake system, steering and drive system will continue to function normally. ▶ Continue driving with caution. ▶ To remove the mist from the outside, wipe once (→ page 99). ▶ To remove the mist from the inside, press MAX (→ page 108). Once the causes of the problem have been rectified, the driving systems and driving safety systems will be available once again, and the corresponding symbols will be switched off.

Display messages	Possible causes/consequences and ▶ Solutions
	If the display message does not disappear, even after a driving time of about 15 minutes: ▶ Stop in accordance with the traffic conditions. ▶ Clean the windshield, especially in the position of the multifunction camera (→ page 146). ▶ Restart the vehicle.
 Restricted During Trailer Operation	* When the trailer socket is occupied, some driving systems will be available only to a limited extent. ▶ Drive with particular caution if you are towing a trailer or a bicycle rack is mounted.
Moving-off Information Assist Inoperative	* Moving-off Information Assist is malfunctioning (→ page 175). ▶ Consult a qualified specialist workshop.
Active Distance Assist Inoperative	* Active Distance Assist DISTRONIC is malfunctioning. Other driving systems and driving safety systems may also be malfunctioning. ▶ Continue driving with caution. or ▶ Stop the vehicle in accordance with the traffic conditions and restart the vehicle. ▶ If the display message does not disappear, consult a qualified specialist workshop.
Active Distance Assist Currently Unavailable See Operator's Manual	* A warning tone also sounds. Active Distance Assist DISTRONIC has been switched off and is temporarily inoperative. This may be due to the following causes: • The function is impaired due to heavy rain or snow. • The radar sensor system is temporarily inoperative, e.g. due to electromagnetic radiation close to TV or radio transmitting stations or other sources of radiation. • The system is outside the operating temperature range. • The on-board electrical system voltage is too low. If the causes mentioned above no longer apply, the display message will disappear and Active Distance Assist DISTRONIC will become operational once again. If the display message does not disappear: ▶ Stop in accordance with the traffic conditions. ▶ Secure the vehicle against rolling away. ▶ Restart the vehicle.

Display messages	Possible causes/consequences and ▶ Solutions
Active Distance Assist Available Again	* Active Distance Assist DISTRONIC is operational again after being temporarily unavailable. You can now switch Active Distance Assist DISTRONIC on again (→ page 156).
Blind Spot Assist and Exiting Warning Currently Unavailable See Operator's Manual	* Blind Spot Assist is temporarily non-operational. This may be due to the following causes: • The sensors in the rear bumper are dirty. • The function is impaired due to heavy rain or snow. • The radar sensor system is temporarily non-operational, e.g., due to electromagnetic radiation close to TV or radio transmitting stations or other sources of radiation. • The system is outside the operating temperature range. If the causes mentioned above no longer apply, the display message will disappear and Blind Spot Assist will become operational once again. If the display message does not disappear: ▶ Stop in accordance with the traffic conditions. ▶ Secure the vehicle against rolling away. ▶ Switch off the vehicle. ▶ Clean the sensors in the rear bumper (→ page 230). ▶ Restart the vehicle.
Blind Spot Assist and Exit Warning Inoperative	* Blind Spot Assist is malfunctioning. ▶ Consult a qualified specialist workshop.
Sideguard Assist Currently Unavailable	* Sideguard Assist is temporarily unavailable (→ page 174). The system limits have been reached (→ page 174). ▶ Continue driving. When the causes have been eliminated, the system will be available again. or ▶ If the display message does not disappear, stop the vehicle in accordance with the traffic conditions and restart the vehicle. ▶ If necessary, clean the rear passenger compartment bumper. If the bumper is very dirty, the sensors in the bumper may malfunction.
Sideguard Assist Inoperative	* Sideguard Assist is malfunctioning (→ page 173). ▶ Consult a qualified specialist workshop.
Active Lane Keeping Assist Reduced Range of Functions See Operator's Manual	* Active Lane Keeping Assist is available but restricted. ▶ Drive on. or ▶ Stop the vehicle in accordance with the traffic conditions and restart the vehicle. ▶ If the display message does not disappear: consult a qualified specialist workshop.

Display messages	Possible causes/consequences and ▶ Solutions
Active Lane Keeping Assist Currently Unavailable See Operator's Manual	* Active Lane Keeping Assist is temporarily unavailable. This may be due to the following causes: • The windshield is dirty in the camera's field of vision. • Visibility is impaired due to heavy rain, snow or fog. • Lane markings are absent for a long period of time. • The lane markings are worn, dark or covered by dirt or snow, forexample. If the causes mentioned above no longer apply, the display message will disappear and Active Lane Keeping Assist will be operational again. If the display message does not disappear: ▶ Stop in accordance with the traffic conditions. ▶ Secure the vehicle against rolling away. ▶ Clean the windshield.
Active Lane Keeping Assist Inoperative	* Active Lane Keeping Assist is malfunctioning . ▶ Drive on. or ▶ Stop the vehicle in accordance with the traffic conditions and restart the vehicle. ▶ If the display message does not disappear: consult a qualified specialist workshop.
Active Brake Assist Range of Functions Currently Reduced See Operator's Manual	* Active Brake Assist may be temporarily unavailable or only partially available. This may be due to the following causes: • The sensors in the front bumper are dirty. • The area of the windshield where the camera is located is dirty. • The function is impaired due to heavy rain or snow. • The radar sensor system is temporarily inoperative, e.g. due to electromagnetic radiation close to TV or radio transmitting stations or other sources of radiation. • The system is outside the operating temperature range. • The on-board electrical system voltage is too low. If the causes mentioned above no longer apply, the display message will disappear. Active Brake Assist is operational again. If the display message does not disappear: ▶ Stop in accordance with the traffic conditions. ▶ Secure the vehicle against rolling away. ▶ Switch off the vehicle. ▶ Clean the area of the windshield where the camera is located (→ page 230). ▶ Clean the sensors in the front bumper (→ page 230). ▶ Start the vehicle again.

Display messages	Possible causes/consequences and ▶ Solutions
Active Brake Assist Reduced Range of Functions See Operator's Manual	* Active Brake Assist may be temporarily unavailable or only partially available. ▶ Continue driving with caution. or ▶ Stop the vehicle in accordance with the traffic conditions and restart the vehicle. ▶ If the display message does not disappear, consult a qualified specialist workshop.

Parking assistance systems

Display messages	Possible causes/consequences and ▶ Solutions
PARKTRONIC Inoperative See Operator's Manual	* Parking Assist PARKTRONIC is malfunctioning. When the causes have been eliminated, the system will be available again. ▶ Continue driving while paying attention to the vehicle's surroundings. or ▶ Stop the vehicle in accordance with the traffic conditions and restart the vehicle. ▶ If the display message still appears, consult a qualified specialist workshop.

Climate control

Display messages	Possible causes/consequences and ▶ Solutions
Air Conditioning System Fault See Operator's Manual	* The function of the climate control system is temporarily restricted. The quantity of air and flow of fresh air are controlled automatically. ▶ Have the climate control system checked at a qualified specialist workshop.

Engine

Display messages	Possible causes/consequences and ▶ Solutions
 Refill Coolant See Operator's Manual	* The coolant level is too low. **NOTE** Engine damage due to insufficient coolant ▶ Avoid long journeys with insufficient coolant. ▶ Add coolant, following the notes on coolant (→ page 224). If you frequently need to add coolant: ▶ Have the engine cooling system checked at a qualified specialist workshop.

Display messages	Possible causes/consequences and ▶ Solutions
 Refill Coolant Immediately See Operator's Manual	* The coolant level is too low. **!** **NOTE** Engine damage due to insufficient coolant ▶ Avoid long journeys with insufficient coolant. ▶ Immediately add coolant, following the notes on coolant (→ page 224). If you frequently need to add coolant: ▶ Have the engine cooling system checked at a qualified specialist workshop.
	* The fan motor is defective. ▶ Check the coolant temperature display on the instrument cluster. If the coolant temperature is below the maximum value specified below, you can continue driving to the nearest qualified specialist workshop. Avoid high engine loads, e.g. driving in mountainous terrain or stop-and-go driving. During normal driving and if the coolant level is correct, the display is permitted to rise to (120°C).
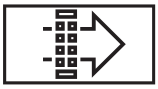 Replace Air Filter	* The engine air filter is dirty and must be replaced. ▶ Consult a qualified specialist workshop.
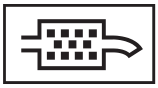 Diesel Particulate Filter Drive at High Engine Speeds See Operator's Manual	* Automatic regeneration of the diesel particulate filter is not sufficient or is malfunctioning. ▶ Drive at an engine speed above 2000 rpm until the display message disappears. If the display message does not go out after approximately 20 minutes, have the malfunction rectified immediately at a qualified specialist workshop.
 Add 1 Liter Engine Oil At Next Refueling	* The engine oil level has dropped to the minimum level. **!** **NOTE** Engine damage caused by driving with insufficient engine oil ▶ Avoid long journeys with insufficient engine oil. ▶ Check the oil level at the next refueling stop (→ page 223). ▶ If necessary, add engine oil (→ page 223). If engine oil frequently needs to be topped up: ▶ Have the engine checked at a qualified specialist workshop.

Display messages	Possible causes/consequences and ▶ Solutions
 Check Engine Oil At Next Refueling	* A warning tone also sounds. The oil level in your vehicle has fallen to the minimum. **!** **NOTE** Engine damage caused by driving with insufficient engine oil ▶ Avoid long journeys with insufficient engine oil. ▶ Check the oil level when next refueling, at the latest (→ page 223). ▶ If necessary, add engine oil (→ page 223). If engine oil frequently needs to be topped up: ▶ Have the engine checked at a qualified specialist workshop.
 Add 1 Quart Engine Oil At Next Refueling	* The engine oil level has dropped to the minimum level. **!** **NOTE** Engine damage caused by driving with insufficient engine oil ▶ Avoid long journeys with insufficient engine oil. ▶ When next refueling, add 1.1 US qt (1 l) of engine oil (→ page 223). Read notes on engine oil (→ page 287).
 Engine Oil Level Stop Switch Off the Vehicle	* The oil level is too low. There is a risk of engine damage. ▶ Stop the vehicle immediately in accordance with the traffic conditions and switch it off. ▶ Secure the vehicle against rolling away. ▶ Check the oil level (→ page 223). ▶ If necessary, add engine oil (→ page 223).
 Engine Oil Pressure Stop Switch Off Vehicle	* The oil pressure is too low. **!** **NOTE** Engine damage caused by driving with insufficient oil pressure ▶ Avoid driving with insufficient oil pressure. ▶ Stop the vehicle immediately in accordance with the traffic conditions. Do not continue driving! ▶ Switch off the vehicle. ▶ Contact a qualified specialist workshop.
 Engine Oil Level Cannot Be Measured	* The electrical connection to the oil level sensor has been interrupted or the oil level sensor is faulty. ▶ Consult a qualified specialist workshop.

Display messages	Possible causes/consequences and ▶ Solutions
 Engine Oil Level Reduce Oil Level	* The engine oil level is too high. **NOTE** Engine damage caused by driving with excess engine oil ▶ Avoid long journeys with excess engine oil. ▶ Consult a qualified specialist workshop immediately and have the engine oil level reduced.
 Fuel filter Fault Service Required	* There is water in the fuel filter. The water must be drained off. ▶ Consult a qualified specialist workshop.

Brakes

Display messages	Possible causes/consequences and ▶ Solutions
Check Brake Pads See Operator's Manual	* The brakepads have reached their wear limit. **WARNING** Risk of accident due to restricted braking power When the brake pads have reached their wear limit, the braking power may be restricted. ▶ Drive on carefully. ▶ Have the brake system checked immediately at a qualified specialist workshop. ▶ Consult a qualified specialist workshop.
 Check Brake Fluid Level	* There is insufficient brake fluid in the brake fluid reservoir. **WARNING** Risk of an accident due to low brake fluid level If the brake fluid level is too low, the braking effect and the braking characteristics may be impaired. ▶ Pull over and stop the vehicle safely as soon as possible, paying attention to road and traffic conditions. Do not continue driving under any circumstances. ▶ Consult a qualified specialist workshop. ▶ Do not add brake fluid. ▶ Stop the vehicle immediately in accordance with the traffic conditions. Do not continue driving!
 To Release the Parking Brake: Switch On the Vehicle	* The red indicator lamp (P) is lit. You have attempted to release the electric parking brake with the vehicle switched off. ▶ Switch on the vehicle.

Display messages	Possible causes/consequences and ▶ Solutions
 Release Parking Brake	* The red Ⓟ indicator lamp on the instrument cluster is flashing. A warning tone also sounds. You are driving with the parking brake applied or performing emergency braking using the parking brake. ▶ Release the parking brake (→ page 141).
 Parking Brake See Operator's Manual (manual parking brake)	* The yellow Ⓟ warning lamp and the red Ⓟ indicator lamp light up. The parking brake is malfunctioning. **Releasing the parking brake:** ▶ Switch the vehicle off and on again. ▶ Release the parking brake. If the parking brake still cannot be released: ▶ Do not drive on. ▶ Contact a qualified specialist workshop. * The red Ⓟ indicator lamp flashes, and the yellow Ⓟ warning lamp lights up. The parking brake is malfunctioning. ▶ Switch the vehicle off and on again. ▶ Release or apply the parking brake. If the red Ⓟ indicator lamp continues flashing: ▶ Do not drive on. ▶ Secure the vehicle against rolling away. ▶ Engage first gear. ▶ Turn the front wheels towards the curb. ▶ Contact a qualified specialist workshop.
 Parking Brake See Operator's Manual (electric parking brake)	* The yellow Ⓟ indicator lamp is lit. The electric parking brake is malfunctioning. **To apply:** ▶ Switch the vehicle off and back on again. ▶ Apply the electric parking brake manually (→ page 144). If it is not possible to apply the electric parking brake: ▶ Consult a qualified specialist workshop. ▶ Where necessary, also secure the parked vehicle against rolling away. * The yellow Ⓟ and red Ⓟ indicator lamps are lit. The electric parking brake is malfunctioning. **To release:** ▶ Switch the vehicle off and back on again. ▶ Release the electric parking brake manually (→ page 144). or

Display messages	Possible causes/consequences and ▶ Solutions
	▶ Release the electric parking brake automatically (→ page 144). If it is still not possible to release the electric parking brake: ▶ Do not continue driving! Contact a qualified specialist workshop. * The yellow [(P)] indicator lamp is lit, and the red [(P)] indicator lamp is flashing. The electric parking brake is malfunctioning. The electric parking brake could not be applied or released. ▶ Switch the vehicle off and back on again. To apply: ▶ Release and then apply the electric parking brake manually (→ page 144). To release: ▶ Apply and then release the electric parking brake manually. If it is not possible to apply the electric parking brake or the red [(P)] indicator lamp continues to flash: ▶ Do not continue driving! Contact a qualified specialist workshop. ▶ Where necessary, also secure the parked vehicle against rolling away. * The yellow [(P)] indicator lamp is lit, and the red [(P)] indicator lamp flashes for approximately ten seconds after the electric parking brake has been applied or released. It then remains lit or goes out. The electric parking brake is malfunctioning. If the state of charge is too low: ▶ Charge the 12 V battery (→ page 238). To apply: ▶ Switch off the vehicle. The electric parking brake will be applied automatically. ▶ Apply the electric parking brake manually. If you do not want the electric parking brake to be applied, e.g. at an automatic car wash or when the vehicle is being towed, leave the vehicle switched on. This does not include having the vehicle towed with the rear axle raised. If the electric parking brake is not applied automatically: ▶ Switch the vehicle off and back on again. ▶ Release and then apply the electric parking brake manually (→ page 144). If it is not possible to apply the electric parking brake: ▶ Consult a qualified specialist workshop. ▶ Where necessary, also secure the parked vehicle against rolling away. To release:

Display messages	Possible causes/consequences and ▶ Solutions
	▶ If the conditions for automatic release are fulfilled and the electric parking brake is not released automatically, release the electric parking brake manually (→ page 144). If it is still not possible to release the electric parking brake: ▶ Do not continue driving! Contact a qualified specialist workshop.
 Incline Too Steep See Operator's Manual	* The on-board electrical system voltage is low or a malfunction has occurred in the system; the holding force may not be sufficient for the incline. ⚠ **WARNING** Risk of accident if the electrical parking brake has insufficient holding force If the electrical parking brake does not have sufficient holding force on a steep incline, the vehicle may roll away. ▶ Park the vehicle on a level surface only and secure it against rolling away. ▶ Shift the automatic transmission to position P. Observe the notes on parking the vehicle (→ page 140).

Tires

Display messages	Possible causes/consequences and ▶ Solutions
Please Correct Tire Pressure	* The yellow warning lamp (!) also lights up. The tire pressure is too low for at least one tire, or the difference in tire pressure between the individual wheels is too great. The wheel position is shown. ▶ Check the tire pressure at the next opportunity (→ page 257). ▶ Correct the tire pressure as necessary. ▶ Restart the tire pressure monitoring system (→ page 258).
Check Tires	* A warning tone will sound, and the yellow warning lamp (!) will light up. The tire pressure in one or more tires has dropped significantly. The wheel position is shown. ⚠ **WARNING** Risk of an accident due to insufficient tire pressure • The tires can burst. • The tires can wear excessively and/or unevenly. • The driving characteristics as well as the steering and braking may be greatly impaired. You could then lose control of the vehicle. ▶ Observe the recommended tire pressures. ▶ Adjust the tire pressure if necessary.

Display messages	Possible causes/consequences and ▶ Solutions
	▶ Stop the vehicle without steering or braking suddenly. Pay attention to the traffic conditions. ▶ Secure the vehicle against rolling away. ▶ Check the tires. If necessary, replace the wheel (→ page 268). ▶ Check the tire pressure (→ page 257). Correct the tire pressure as necessary.
Warning Tire Fault	* The yellow warning lamp [(!)] also lights up. The tire pressure for one or more tires has dropped suddenly. The wheel position is shown. ⚠ **WARNING** Risk of an accident from driving with a flat tire • The tires can overheat and cause a fire. • The driving characteristics as well as the steering and braking may be greatly impaired. You could then lose control of the vehicle. ▶ Do not drive on with a flat tire. ▶ Observe the notes on flat tires. ▶ Stop the vehicle without steering or braking suddenly. Pay attention to the traffic conditions. ▶ Secure the vehicle against rolling away. ▶ Check the tires. If necessary, replace the wheel (→ page 268).
Tire Press. Monitoring System Currently Unavailable	* The yellow warning lamp [(!)] flashes for about one minute and then lights up continuously. Due to a source of radio interference, no signals from the tire pressure sensor are being received. The tire pressure monitoring system is temporarily malfunctioning. The tire pressure monitoring system will restart automatically as soon as the cause has been rectified.
Tire Pressure Sensors Missing	* The yellow warning lamp [(!)] flashes for about one minute and then lights up continuously. There is no signal from the tire pressure sensor for at least one tire. The display is not showing any pressure value for the respective tire. ▶ Have the faulty tire pressure sensor replaced at a qualified specialist workshop.
Tire Pressure Monitoring System Inoperative Tire Pressure Sensors Missing	* The yellow warning lamp [(!)] flashes for about one minute and then lights up continuously. The wheels installed do not have suitable tire pressure sensor. The tire pressure monitoring system is deactivated. ▶ Install wheels with suitable tire pressure sensor. The tire pressure monitoring system will switch on after a few minutes of driving.
Tire Pressure Monitoring System Inoperative	* The yellow warning lamp [(!)] flashes for about one minute and then lights up continuously.

Display messages	Possible causes/consequences and ▶ Solutions
	The tire pressure monitoring system is malfunctioning. ▶ Consult a qualified specialist workshop.

Battery

Display messages	Possible causes/consequences and ▶ Solutions
 Stop Vehicle See Operator's Manual	* The 12 V battery is no longer being charged and the state of charge is too low. **NOTE** Possible engine damage if you continue driving ▶ Do not continue driving under any circumstances. ▶ Consult a qualified specialist workshop. ▶ Stop the vehicle immediately in accordance with the traffic conditions. Do not continue driving! ▶ Switch off the vehicle. ▶ Contact a qualified specialist workshop.
 Stop Vehicle and Do Not Switch Off	* The state of charge for the 12 V battery is too low. ▶ Stop the vehicle immediately in accordance with the traffic conditions. Do not continue driving! ▶ Leave the engine running. ▶ If the display message disappears: continue driving. ▶ If the display message does not disappear: consult a qualified specialist workshop.
 12 V Battery See Operator's Manual	* The vehicle is off and the state of charge of the 12 V battery is too low. ▶ Switch off electrical consumers that are not required. ▶ Drive for 30–60 mins. or ▶ Charge the 12 V battery when stationary (→ page 238). * If the message appears while the vehicle is switched on, this indicates an on-board electrical system malfunction. ▶ Consult a qualified specialist workshop.
 Stop Vehicle To Charge the 12 V Battery Do Not Switch Off Vehicle	* The state of charge of the 12 V battery is too low. ▶ Stop the vehicle immediately in accordance with the traffic conditions. Do not continue driving! ▶ Leave the vehicle running. ▶ If the display message disappears: drive on. ▶ If the display message does not disappear: consult a qualified specialist workshop.

Display messages	Possible causes/consequences and ▶ Solutions
 See Operator's Manual	* A warning tone also sounds. The battery is no longer being charged for one of the following reasons: • defective alternator • torn poly-V belt • malfunction in the electronics **NOTE** Possible engine damage if you continue driving ▶ Do not continue driving under any circumstances. ▶ Consult a qualified specialist workshop. ▶ Stop the vehicle immediately in accordance with the traffic conditions and switch it off. Do not continue driving. If you do, the engine may overheat. ▶ Secure the vehicle against rolling away. ▶ Contact a qualified specialist workshop.

Key

Display messages	Possible causes/consequences and ▶ Solutions
Place Key in the Marked Space See Operator's Manual	* Key detection is malfunctioning. ▶ Change the key's position in the vehicle. ▶ Place the key in the slot for starting with the key (→ page 114).
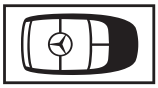 Replace Key Battery	* The key battery is flat. ▶ Replace the battery (→ page 49).
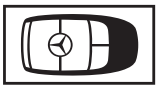 Key Not Detected (white display message)	* The key is currently not detected. ▶ Change the key's position in the vehicle. ▶ Try to start the vehicle. ▶ If the key is still not detected, place it in the marked space for starting with the key (→ page 114). ▶ Start the vehicle.
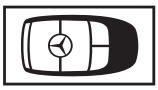 Key Not Detected (red display message)	* The key can no longer be detected during a journey and may no longer be in the vehicle. If the key is no longer in the vehicle and you switch off the vehicle: • You can no longer start the vehicle. • You cannot centrally lock the vehicle. ▶ Ensure that the key is in the vehicle. If the key is in the vehicle and is still not detected: ▶ Stop the vehicle immediately in accordance with the traffic conditions.

Display messages	Possible causes/consequences and ▶ Solutions
	▶ Place the key in the marked space for starting with the key (→ page 114). The key battery is at low capacity or flat. ▶ Check the battery via the indicator lamp (→ page 48). ▶ Replace the key battery as required (→ page 49).
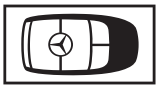 Key Not Detected Place Key Back into Driver's Area (white display message)	* The key is not in the driver's area of the vehicle (→ page 48). ▶ Change the key's position in the vehicle. ▶ If necessary, stop the vehicle immediately in accordance with the traffic conditions. ▶ Start the vehicle with the key in the marked space (→ page 114).
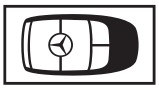 Key Not Detected Place Key Back into Driver's Area (red display message)	* The key is not in the driver's area of the vehicle (→ page 48). ▶ Change the key's position in the vehicle. ▶ If necessary, stop the vehicle immediately in accordance with the traffic conditions. ▶ Start the vehicle with the key in the marked space (→ page 114).
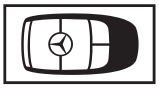 Replace Key	* Have the key replaced. ▶ Consult a qualified specialist workshop.

Vehicle

Display messages	Possible causes/consequences and ▶ Solutions
Wiper Fault	* The windshield wiper is malfunctioning. ▶ Restart the vehicle. If the display message still appears: ▶ Consult a qualified specialist workshop.
	* A warning tone also sounds. The hood is open. ⚠ **WARNING** Risk of accident due to driving with the hood unlocked The hood may open and block your view. ▶ Never release the hood when driving. ▶ Before every trip, ensure that the hood is locked. ▶ Stop the vehicle immediately in accordance with the traffic conditions. ▶ Secure the vehicle against rolling away.

Display messages	Possible causes/consequences and ▶ Solutions
	▶ Close the hood.
	* At least one door is open. In addition, a warning tone sounds while the vehicle is in motion. The display shows the open door or doors. ▶ Close all the doors.
Step Not Retracted See Operator's Manual	* The electric step is not retracted, or is only partially retracted. ▶ Ensure there is sufficient clearance for the electric step. ▶ Open or close the sliding door again. ▶ If the electric step does not completely retract again, push it in manually (emergency release) (→ page 62).
Step Not Extended See Operator's Manual	* The electric step is not extended, or is only partially extended. ▶ Ensure there is sufficient clearance for the electric step. ▶ Open or close the sliding door again. ▶ If the electric step does not completely extend again, push it in manually (emergency release) (→ page 62). ▶ Inform passengers that the step is unavailable before they exit the vehicle.
Vehicle is Ready to Drive Switch Off the Ignition Before Exiting	* You are about to exit a vehicle which is ready to drive. ▶ Switch off the vehicle, secure it against rolling backwards or forwards and take the key with you. ▶ If you do not leave the vehicle, switch off the electrical consumers, e.g. the seat heating. Otherwise, the 12-V battery may discharge and starting the engine may be possible only with the help of a second battery (jump start).
Refill Washer Fluid	* The washer fluid level in the washer fluid reservoir has dropped below the minimum. ▶ Add washer fluid (→ page 225).
Steering Fault Stop Immediately See Operator's Manual	* The steering is malfunctioning. Steerability is heavily impaired. ⚠ **WARNING** Risk of accident if steering capability is impaired If the steering does not function as intended, the vehicle's operating safety is jeopardized. ▶ Pull over and stop the vehicle safely as soon as possible, paying attention to road and traffic conditions. Do not continue driving under any circumstances. ▶ Consult a qualified specialist workshop.
Steering Fault Increased Physical Effort See Operator's Manual	* The steering power assistance is malfunctioning. ⚠ **WARNING** Risk of an accident due to altered steering characteristics If the power assistance of the steering fails partially or completely, you will need to use more force to steer.

Display messages	Possible causes/consequences and ▶ Solutions
	▶ If safe steering is possible, drive on carefully. ▶ Visit or consult a qualified specialist workshop immediately.
Risk of Rolling Driver's Seat Not Occupied Drive Range P Not Selected	* A warning tone also sounds. The driver's seat has been vacated and the transmission is in position N, R or D. ▶ Shift the transmission to position P . ▶ Secure the vehicle against rolling backwards or forwards.
Shift to Drive Range P or N to Start Engine	* You have attempted to start the vehicle in transmission position R or D. ▶ Shift the transmission to position P or N.
Apply Brake to Shift from Drive Range P	* You have tried to shift the transmission to position D, R or N without applying the brake. ▶ Depress the brake pedal.
To Deselect Drive Range P or N Depress Brake and Start Vehicle	* You have attempted to shift the transmission out of park position P or neutral N and into another transmission position. ▶ Depress the brake pedal. ▶ Start the vehicle. ▶ Change the transmission position.
To Engage Drive Range R First Depress the Brake	* You have tried to shift the transmission to position R without applying the brake. ▶ Depress the brake pedal. ▶ Shift the transmission to position R.
N Permanently Active: Risk of Rolling	* A warning tone also sounds. The transmission was shifted to position N as the vehicle was rolling or traveling. ▶ To stop, depress the brake pedal and, when the vehicle is at a standstill, shift the transmission to position P. ▶ To continue your journey, shift the transmission to position R or D.
Risk of Rolling Driver's Door Open Drive Range P Not Selected	* A warning tone also sounds. The driver's door is open and the transmission is in position N, R or D. ▶ Shift the transmission to position P . ▶ Secure the vehicle against rolling backwards or forwards.
Do Not Change Drive Range Service Required	* A warning tone also sounds. You can no longer change the transmission position due to a malfunction. If transmission position D has been selected: ▶ Without changing the transmission position, consult a qualified specialist workshop. If transmission position P, R or N has been selected: ▶ Notify a qualified specialist workshop.
Reversing Not Possible Service Required	* The transmission is malfunctioning. Transmission position R cannot be selected. ▶ Notify a qualified specialist workshop.

Display messages	Possible causes/consequences and ▶ Solutions
Only Shift to Drive Range P when Vehicle is Stationary	* The vehicle is still moving. ▶ Stop in accordance with the traffic conditions. ▶ Shift the transmission to position P .
4MATIC Currently Unavailable	* All-wheel drive is temporarily suspended from the system as the limit values have been reached due to increased friction. ▶ If possible, drive on carefully; otherwise, wait a short while. As soon as the protective functions are deactivated, all-wheel drive will be available again.
4MATIC Inoperative	* All-wheel drive is not available. Possible causes: faulty cable or faulty transfer case. ▶ Consult a workshop.
Transmission Fault Stop	* The transmission is malfunctioning. The transmission automatically switches to neutral N. ▶ Stop the vehicle immediately in accordance with the traffic conditions. ▶ Shift the transmission to position P . ▶ Inform a qualified specialist workshop.
SOS NOT READY	* The emergency call system is not available. Possible causes for this include: • The vehicle is switched off. • The emergency call system is malfunctioning. ▶ Switch on the vehicle. If an emergency call is unavailable, a message to this effect will appear on the instrument cluster. ▶ Consult a qualified specialist workshop. ⓘ You can find more information on the regional availability of the emergency call system at: http://www.mercedes-benz.com/connect_ecall

Lights

Display messages	Possible causes/consequences and ▶ Solutions
 Left Low Beam (example)	* The corresponding illuminant is defective. Have defective LED illuminants replaced at a qualified specialist workshop. ▶ Observe the notes on changing a bulb (→ page 95). ▶ Replace the defective bulb at the front (→ page 95) or rear passenger compartment (→ page 96).
 Fault See Operator's Manual	* The exterior lighting is malfunctioning. ▶ Consult a qualified specialist workshop.

Display messages	Possible causes/consequences and ▶ Solutions
Automatic Driving Lights Inoperative	* The light sensor is faulty. The automatic driving lights are malfunctioning. ▶ Switch the light functions on/off manually (→ page 88). ▶ Consult a qualified specialist workshop.
Adaptive Highbeam Assist Currently Unavailable See Operator's Manual	* Adaptive Highbeam Assist is deactivated and temporarily inoperative. This may be due to the following causes: • The windshield is dirty in the camera's field of vision. • Visibility is impaired due to heavy rain, snow or fog. ▶ Clean the windshield. When the system detects that the camera is fully operational, the display will show a message reading Adaptive Highbeam Assist Available Again Adaptive Highbeam Assist will then be operational again.
Adaptive Highbeam Assist Inoperative	* Adaptive Highbeam Assist is malfunctioning. ▶ Switch high beam on/off manually. ▶ Consult a qualified specialist workshop.

Indicator and warning lamps

Overview of indicator and warning lamps

Some systems will perform a self-test when the vehicle is switched on. Some indicator and warning lamps may briefly light up or flash. This behaviour is non-critical. These indicator and warning lamps indicate a malfunction only if they light up or flash after the vehicle has been started or during a journey.

Indicator and warning lamps:

- Low beam (→ page 88)
- Side lights (→ page 88)
- High beam (→ page 89)
- Turn signal lights (→ page 89)
- Fog light (→ page 88)
- Rear fog light (→ page 88)
- Seat belt not fastened
- BRAKE and USA: Brakes (red) (→ page 322)
- Canada: Brakes (red) (→ page 322)
- Brakes (yellow)
- ABS malfunction (→ page 322)
- LOW RANGE Off-road gear
- ESP® (→ page 322)
- ESP® OFF (→ page 322)
- Active Brake Assist switched off
- PARK and USA: Parking brake applied (red) (→ page 322)
- Canada: Parking brake applied (red) (→ page 322)
- Parking brake (yellow) (→ page 322)
- Electric power steering malfunction
- Electrical malfunction (→ page 326)
- Restraint system
- Engine diagnostics (→ page 326)
- Fuel reserve with fuel filler cap location indicator (→ page 326)
- Coolant too hot/cold (→ page 326)
- Distance warning (→ page 325)
- Preglow
- Tire pressure monitor (→ page 256)

Occupant safety

Warning/indicator lamp	Possible causes/consequences and ▶ Solutions
 Restraint system warning lamp	*The red restraint system warning lamp is on while the vehicle is on. The restraint system is malfunctioning (→ page 34). ⚠ **WARNING** Risk of injury due to malfunctions in the restraint system Components in the restraint system may be activated unintentionally or not deploy as planned in an accident. ▶ Have the restraint system checked and repaired immediately at a qualified specialist workshop. ▶ Drive on carefully. ▶ Note the messages on the instrument cluster. ▶ Consult a qualified specialist workshop immediately.
 Seat belt warning lamp flashes	*The red seat belt warning lamp flashes, and an intermittent warning tone sounds. The driver or front passenger has not fastened their seat belt while the vehicle is in motion. ▶ Fasten your seat belt (→ page 33). The warning lamp and the intermittent warning tone will go out.
 Seat belt warning lamp lights up	*The red seat belt warning lamp lights up after the vehicle starts as soon as the driver's or front passenger door has been closed. An intermittent warning tone may also sound. For certain countries only: The red seat belt warning lamp lights up for a maximum of six seconds after the vehicle has been switched on. The driver's or front passenger's seat belt is not fastened. ▶ Fasten your seat belt (→ page 33). The warning lamp will go out.

Safety systems

Warning/indicator lamp	Possible causes/consequences and ▶ Solutions
 ESP® warning lamp flashes	*The yellow ESP® warning lamp flashes while the vehicle is in motion. ESP® or traction control intervenes because there is a risk of skidding or at least one wheel is spinning. Cruise control or Active Distance Assist DISTRONIC has been automatically switched off. ▶ When pulling away, accelerate only as much as is necessary. ▶ Depress the accelerator pedal less during your journey. ▶ Adapt your driving style to suit the weather and road conditions. ▶ Do not switch off ESP®. In exceptional cases, it may be better to switch off ESP®(→ page 148).

Warning/indicator lamp	Possible causes/consequences and ▶ Solutions
ESP® warning lamp lights up	*The yellow ESP® warning lamp is on while the vehicle is on. ESP® is malfunctioning. Other driving systems and driving safety systems (e.g. BAS) may also be malfunctioning. ⚠ **WARNING** Risk of skidding if ESP® is malfunctioning If ESP® is malfunctioning, ESP® cannot carry out vehicle stabilization. In addition, other driving safety systems are switched off. ▶ Drive on carefully. ▶ Have ESP® checked at a qualified specialist workshop. ▶ Pay attention to the display messages. ▶ Drive on carefully. ▶ Consult a qualified specialist workshop immediately.
ESP® OFF warning lamp	*The yellow ESP® OFF warning lamp is on while the vehicle is on. ESP® has been deactivated. ⚠ **WARNING** Risk of skidding when driving with ESP® deactivated ESP® does not act to stabilize the vehicle. The availability of further driving safety systems is also limited. ▶ Drive on carefully. ▶ Deactivate ESP® only for as long as the situation requires. If ESP® cannot be activated, ESP® is malfunctioning. ▶ Have ESP® checked immediately at a qualified specialist workshop. ▶ Switch ESP® on again. In exceptional cases, it may be better to switch off ESP®(→ page 148). ▶ Adapt your driving style to suit the road and weather conditions. If ESP® cannot be switched on: ▶ Drive on carefully. ▶ Have ESP® checked at a qualified specialist workshop.
Parking brake indicator lamp (yellow)	*The yellow parking brake indicator lamp is flashing or lit up. The parking brake is malfunctioning. ▶ Note the messages on the instrument cluster.
Parking brake indicator lamp (red)	*The red parking brake indicator lamp is flashing or lit up. ▶ Observe the notes on the manual parking brake (→ page 141) or the electric parking brake (→ page 143). If the (P) yellow indicator lamp also lights up or flashes, the parking brake is malfunctioning.

Warning/indicator lamp	Possible causes/consequences and ▶ Solutions
	▶ Note the messages on the instrument cluster.
 Brakes warning lamp (red)	*The red brake system warning lamp is on while the vehicle is on. Possible causes: • The brake force boosting is malfunctioning and the braking characteristics may be affected. • There is insufficient brake fluid in the brake fluid reservoir. ⚠ **WARNING** Risk of accident and injury if brake force boosting is malfunctioning If brake force boosting is malfunctioning, increased brake pedal force may be necessary for braking. The braking characteristics may be impaired. The braking distance can increase in emergency braking situations. ▶ Stop in a safe location immediately. Do not continue driving. ▶ Consult a qualified specialist workshop. ⚠ **WARNING** Risk of an accident due to low brake fluid level If the brake fluid level is too low, the braking effect and the braking characteristics may be impaired. ▶ Pull over and stop the vehicle safely as soon as possible, paying attention to road and traffic conditions. Do not continue driving under any circumstances. ▶ Consult a qualified specialist workshop. ▶ Do not add brake fluid. ▶ Stop the vehicle immediately in accordance with the traffic conditions. Do not continue driving! ▶ Secure the vehicle against rolling away. ▶ Contact a qualified specialist workshop. ▶ Do not add brake fluid.
 ABS warning lamp	*The yellow ABS warning lamp is on while the vehicle is on. ABS is malfunctioning. If an additional warning tone sounds, this means the EBD is malfunctioning. Other driving systems and driving safety systems may also be malfunctioning. ▶ Note the messages on the instrument cluster. ⚠ **WARNING** There is a risk of skidding if EBD or ABS is malfunctioning The wheels may lock during braking. The steerability and braking characteristics are heavily impaired and the braking distance may increase. In addition, other driving safety systems are switched off. ▶ Drive on carefully.

Warning/indicator lamp	Possible causes/consequences and ▶ Solutions
	▶ Have the brake system checked immediately at a qualified specialist workshop.

Driving and driving safety systems

Warning/indicator lamp	Possible causes/consequences and ▶ Solutions
Distance warning lamp	*The red distance warning lamp lights up while the vehicle is in motion. The distance to the vehicle in front is too small for the selected speed. If an additional warning tone sounds, this means you are approaching an obstacle at too high a speed. ▶ Be ready to apply the brakes immediately. ▶ Increase the distance. Function of Active Brake Assist (→ page 149).
Active Brake Assist warning lamp	*The Active Brake Assist warning lamp is on. Due to dirty sensors or a malfunction, the system is not available or the range of functions is restricted. ▶ Note the messages on the instrument cluster.

Vehicle

Warning/indicator lamp	Possible causes/consequences and ▶ Solutions
Tachograph warning lamp	*The yellow tachograph indicator lamp is lit. The tachograph (TCO) has malfunctioned, e.g. due to invalid data or a missing driver card. Possible causes of malfunctions can be found in the manufacturer's Operator's Manual.
Power steering warning lamp (red)	*The red power steering warning lamp is on while the vehicle is on. The power assistance or the steering itself is malfunctioning. ⚠ **WARNING** Risk of accident if steering capability is impaired If the steering does not function as intended, the vehicle's operating safety is jeopardized. ▶ Pull over and stop the vehicle safely as soon as possible, paying attention to road and traffic conditions. Do not continue driving under any circumstances. ▶ Consult a qualified specialist workshop. ▶ Stop the vehicle immediately in accordance with the traffic conditions. Do not continue driving! ▶ Contact a qualified specialist workshop. ▶ Note the messages on the instrument cluster.

Warning/indicator lamp	Possible causes/consequences and ▶ Solutions
Door indicator lamp	* The yellow "door open" indicator lamp is lit. A door is not fully closed ▶ Close all the doors.

Engine

Warning/indicator lamp	Possible causes/consequences and ▶ Solutions
Electrical malfunction warning lamp	* The red electrical malfunction warning lamp is lit. A malfunction has occurred in the electrics. ▶ Note the messages on the instrument cluster.
Fuel reserve warning lamp	* The yellow fuel reserve warning lamp is on while the vehicle is on. The fuel supply has dropped into the reserve range. Operation of the auxiliary heating (stationary heater) is deactivated in the reserve range. ▶ Refuel the vehicle.
Check Engine warning lamp	* The yellow engine diagnostics warning lamp is on while the vehicle is on. There may be a malfunction in the following vehicle systems: • Engine management • Injection • Exhaust system • Fuel system This may cause the emissions limit values to be exceeded and the engine to run in emergency mode. ▶ Have the vehicle checked immediately at a qualified specialist workshop.
Coolant warning lamp	* The red coolant warning lamp is on while the vehicle is on. The coolant level is too low. If the coolant level is correct, the air supply to the radiator may be impaired or the radiator's electric fan may be faulty. The coolant is too hot and the engine is not being adequately cooled. ⚠ **WARNING** Risk of burns when opening the hood If you open the hood in the event of an overheated engine or fire in the engine compartment, the following situations may occur: • You may come into contact with hot gases. • You may come into contact with other escaping hot operating fluids. ▶ Before opening the hood, allow the engine to cool down.

Warning/indicator lamp	Possible causes/consequences and ▶ Solutions
	▶ In the event of a fire in the engine compartment, keep the hood closed and call the fire service. ▶ Pay attention to the display messages. ▶ Stop the vehicle immediately in accordance with the traffic conditions and switch it off. ▶ Secure the vehicle against rolling away. ▶ Exit the vehicle and keep a safe distance from it until the engine has cooled down. ▶ Check the coolant level and add coolant, complying with the instructions (→ page 224). ▶ If the coolant has to be topped up frequently, have the engine cooling system checked at a qualified specialist workshop. ▶ Ensure that the air supply to the radiator is not impaired, e.g. by a plastic bag that has been blown onto the grille. ▶ Monitor the coolant temperature display on the instrument cluster. ▶ Do not restart the engine until the coolant temperature is below (120°C). If you do, the engine may be damaged. ▶ Drive on to the nearest qualified specialist workshop. Avoid high engine loads, e.g. driving in mountainous terrain or stop-and-go driving.
 Coolant warning lamp	*The red coolant warning lamp is on while the vehicle is on. A warning tone also sounds. The coolant has exceeded the temperature of (120°C). The air supply to the radiator may be impaired or the coolant level may be too low. The engine has not been sufficiently cooled and may be damaged. ⚠ **WARNING** Risk of burns when opening the hood If you open the hood in the event of an overheated engine or fire in the engine compartment, the following situations may occur: • You may come into contact with hot gases. • You may come into contact with other escaping hot operating fluids. ▶ Before opening the hood, allow the engine to cool down. ▶ In the event of a fire in the engine compartment, keep the hood closed and call the fire service. ▶ Pay attention to the display messages. ▶ Stop the vehicle immediately in accordance with the traffic conditions and switch it off. ▶ Secure the vehicle against rolling away. ▶ Exit the vehicle and keep a safe distance from it until the engine has cooled down. ▶ Check the coolant level and add coolant, complying with the instructions (→ page 224).

Warning/indicator lamp	Possible causes/consequences and ▶ Solutions
	▶ If the coolant has to be topped up frequently, have the engine cooling system checked at a qualified specialist workshop. ▶ Ensure that the air supply to the radiator is not impaired, e.g. by a plastic bag that has been blown onto the grille. ▶ Monitor the coolant temperature display on the instrument cluster. ▶ If the coolant temperature is below (120°C), you can continue driving to the nearest qualified specialist workshop. ▶ Avoid high engine loads, e.g. driving in mountainous terrain or stop-and-go driving.
Coolant warning lamp	*The red coolant warning lamp is on while the vehicle is running and the coolant temperature display is at the start of the scale. The temperature sensor for the coolant temperature display is defective. The coolant temperature is no longer being monitored. If the coolant is too hot, the engine may be damaged. ▶ Stop the vehicle immediately in accordance with the traffic conditions and switch it off. Do not continue driving! ▶ Secure the vehicle against rolling away. ▶ Contact a qualified specialist workshop.

Tires

Warning/indicator lamp	Possible causes/consequences and ▶ Solutions
Tire pressure monitoring system warning lamp flashes	*The yellow tire pressure monitoring system warning lamp (pressure loss/malfunction) flashes for approximately one minute and then remains lit. The tire pressure monitoring system is malfunctioning. ⚠ **WARNING** There is a risk of an accident if the tire pressure monitoring system is malfunctioning The tire pressure monitoring system cannot issue a warning if there is pressure loss in one or more of the tires. Tires with insufficient tire pressure may impair the driving characteristics as well as steering and braking. ▶ Have the tire pressure monitoring system checked at a qualified specialist workshop. ▶ Pay attention to the display messages. ▶ Consult a qualified specialist workshop.
Tire pressure monitoring system warning lamp lights up	*The yellow tire pressure monitoring system warning lamp (pressure loss/malfunction) is on. The tire pressure monitoring system has detected a loss of pressure in at least one tire.

Warning/indicator lamp	Possible causes/consequences and ▶ Solutions
	⚠ **WARNING** Risk of an accident due to insufficient tire pressure • The tires can burst. • The tires can wear excessively and/or unevenly. • The driving characteristics as well as the steering and braking may be greatly impaired. You could then lose control of the vehicle. ▶ Observe the recommended tire pressures. ▶ Adjust the tire pressure if necessary. ▶ Stop the vehicle without steering or braking suddenly. Pay attention to the traffic conditions. ▶ Secure the vehicle against rolling away. ▶ Pay attention to the display messages. ▶ Check the tires and, if necessary, replace the wheel (→ page 268). ▶ Check the tire pressure. You can check the tire pressure electronically (→ page 257). ▶ Correct the tire pressure as necessary.

1, 2, 3 ...

3-zone automatic climate control (control panel) ... 106

360° Camera
- Button ... 166
- Care ... 230
- Function ... 163

A

A/C function ... 107

ABS ... 147

Accident and Breakdown Management
- Mercedes-Benz Support calls ... 194

Activating/deactivating the acoustic locking verification signal ... 49

Active Brake Assist
- Function ... 149
- Setting ... 151

Active Distance Assist DISTRONIC
- activating/deactivating ... 156
- calling up a speed ... 156
- Function ... 155
- increasing/decreasing the speed ... 156
- storing a speed ... 156

Active Lane Keeping Assist
- Activating/deactivating ... 177
- Function ... 176
- Setting the sensitivity ... 178
- Trailer operation ... 176

Adaptive Highbeam Assist
- Function ... 91
- Switching on/off ... 91

Adding fluid to the windshield washer system ... 225

Additional turn signal light
- Replacing an illuminant (all-wheel drive vehicles) ... 96

Additives
- Additives (engine oil) ... 287
- Additives (fuel) ... 284
- DEF® ... 136
- Engine oil ... 287
- Fuel ... 284

Adjusting the lights (driving abroad) ... 88

ADR (working speed control)
- Adjusting ... 178
- Function ... 178
- Switching on/off ... 178

Air bag ... 38
- Inflating ... 35
- Overview ... 38
- Warning lamp ... 34

Air intake box
- Cleaning the water drain valve ... 226

Air vents ... 109
- Adjusting (front) ... 109
- Adjusting (rear passenger compartment) ... 110
- Adjusting (roof) ... 110

Air-recirculation mode ... 108

Alarm system ... 65

All-wheel drive
- Notes ... 129

Alternative route ... 207

Animals ... 37

Anti-lock braking system ... 147

Anti-theft alarm system ... 65
- Activating/deactivating ... 66
- Activating/deactivating interior protection ... 67
- Function ... 65
- Interior motion sensor ... 67
- Stopping the alarm ... 66
- Switching the tow-away alarm on/off ... 66
- Tow-away alarm ... 66

Anti-theft protection
- Anti-theft alarm system ... 65
- Immobilizer ... 65

Apps, Digital Extras ... 195

Ashtray ... 83

ASR (acceleration skid control) ... 148

Assistance system ... 147

Assistant display (on-board computer) ... 187

ASSYST PLUS, Service interval display
- Battery disconnection periods ... 220
- Displaying the service due date ... 220
- Function/notes ... 220
- Regular maintenance work ... 220
- Special service requirements ... 220

Attachments ... 19

ATTENTION ASSIST
- Function ... 166
- Setting ... 167

Attention assistant ... 166

Authorised workshop ... 24

Automatic climate control ... 107

Automatic distance control ... 155

Automatic driving lights ... 88

Automatic locking
after closing the last door..... 53
Automatic measures after an accident..... 34
Automatic transmission
DIRECT SELECT lever..... 126
Engaging drive position..... 128
Engaging neutral..... 127
Engaging reverse gear..... 127
Kickdown..... 129
Restricting the shift range..... 128
Selecting park position..... 128
Transmission position display..... 126
Transmission positions..... 126
Auxiliary heating, Stationary heating/ventilation
Function..... 110
Axle load..... 280

B

Baby
Pregnancy (seat belt)..... 33
Back support, Lumbar support..... 73
Backup lamp
Replacing light bulbs (chassis)..... 98
Backup lights
Replacing illuminants (Cargo Van/Tourer)..... 97
BAS..... 147
Basic information..... 31
Battery
Charging..... 238
Charging the starter battery..... 238
Disconnecting the starter battery..... 241
Installing/removing the floor covering..... 240
Key..... 49
Notes (vehicle battery)..... 237
Starting assistance..... 238
Battery main switch
Notes..... 125
Switching power supply on/off..... 126
Belt
Adjusting the height..... 33
Fastening..... 33
Notes on wearing correctly..... 32
Unfastening..... 38
Blind Spot Assist
Activating/deactivating..... 173
Exit warning..... 172
Function..... 172
Function of Rear Cross Traffic Alert..... 172
Rear Cross Traffic Alert..... 172
Bluetooth®
Connecting a mobile phone..... 211
Bodies (body/equipment mounting directives)..... 19
Bottle holder..... 82
Brake
ABS (anti-lock braking system)..... 147
Activating/deactivating the HOLD function..... 158
Active Brake Assist..... 149
BAS (Brake Assist System)..... 147
Braking with parking brake..... 118
Breaking-in notes..... 115
Downhill gradient..... 118
Driving instructions..... 118
EBD (Electronic Brakeforce Distribution)..... 149
Heavy/light loads..... 118
HOLD function..... 157
Limited braking effect (salt-treated roads)..... 118
New brake disks/brake linings..... 118
new brake linings/brake disks..... 115
Post-collision brake..... 35
Wet road surfaces..... 118
Brake Assist System..... 147
Brake fluid..... 289
Brakeforce Distribution..... 149
Braking assistance..... 147
Breakdown
Assistance overview..... 15
Changing a wheel..... 268
Roadside Assistance..... 20
Tow-starting..... 245
Towing (both axles on the ground)..... 242
Towing (raised front/rear axle)..... 244
Transporting the vehicle..... 244
Breaking-in notes..... 115
Bulbs..... 95

C

Calling Support at Mercedes-Benz..... 192
Calls
Telephone menu..... 211
Via the overhead control panel..... 192
Camera
360° camera function..... 163
Activating using GPS (reversing camera)..... 166

Information ... 146
Managing activation points ... 166
Reversing camera ... 160

Car key ... 48

Car wash (care) ... 228

Car-to-X-Communication
Display on map ... 208

Care
Car wash ... 228
Carpet ... 232
Display ... 232
Exterior lighting ... 230
Genuine wood/trim elements ... 232
Headliner ... 232
Plastic trim ... 232
Power washer ... 228
Reversing camera/360° Camera ... 230
Seat belt ... 232
Seat cover ... 232
Sensors ... 230
Tailpipes ... 230
Trailer hitch ... 230
Washing by hand ... 229
Wheels/rims ... 230
Windows ... 230
Wiper blades ... 230

Cargo compartment lamp (motion detector) ... 94

Cargo compartment ventilation ... 111

Cargo tie-down points
Loading capacity ... 296
Overview ... 217

Carpet
Cleaning ... 232

Central locking system
Button ... 51

Change of address ... 21

Change of ownership ... 21

Changing a wheel
Installing a new wheel ... 271
Lowering the vehicle ... 272
Preparing ... 268
Raising the vehicle ... 269
Removing a wheel ... 271

Changing bulbs
High beam ... 95
Indicator (front) ... 95
Low beam ... 95
Tail lamp bulb types (chassis) ... 98

Characteristics of the tire ... 263

Charging
Battery ... 238
Charging wirelessly (mobile phone) ... 85
Charging wirelessly (mobile telephone in front) ... 86
Mobile telephone (USB socket) ... 85

Child safety lock
Sliding door ... 45

Child seat
Adjusting the vehicle seat ... 42
Basic instructions ... 39
Front passenger seat ... 41
Installing ISOFIX ... 43
Risks/dangers ... 40
Securing to the front passenger seat with the seat belt ... 45
The most important information in brief ... 39
Top Tether ... 44

Children
Avoiding dangers in the vehicle ... 40
Basic instructions ... 39
Special seat belt retractor ... 43

Cigarette lighter ... 83

Clean varnish ... 229

Cleaning
Paint ... 229
Vehicle interior ... 232
Washing by hand ... 229

Cleaning the water drain valve (air intake box) ... 226

Climate control
A/C function ... 107
Activating/deactivating ... 106
Adjusting air vents (roof) ... 110
Air distribution settings ... 108
Air vents (front) ... 109
Air vents (rear passenger compartment) ... 110
Air-recirculation mode ... 108
Automatic control (rear compartment) ... 107
Automatically regulating ... 107
Auxiliary heating ... 110
Cargo compartment ventilation (roof ventilator) ... 111
Clearing fogged up windows ... 108
Control panel for 3-zone automatic climate control ... 106
Control panel for dual-zone automatic climate control ... 105

Filling capacity for refrigerant and PAG oil..... 291
Refrigerant..... 290
Setting the air distribution..... 108
Setting the rear compartment climate control..... 106
Switching the rear window heater on/off..... 109
Switching the windshield heater on/off..... 109
Synchronization function..... 108
Ventilating the vehicle (convenience opening)..... 64

Close-range braking..... 171

Co-driver bench seat
Folding the seat surface forwards/backwards..... 75

Cockpit
Instrument panel..... 6

Coffee cup symbol..... 166

Combination switch
Light..... 89
Rear window wiper..... 100
Windshield wipers..... 99

Commuter route..... 207

Components relevant to radio regulation
Declaration of conformity..... 22

Convenience closing
With the SmartKey..... 64

Convenience opening
With the SmartKey..... 64

Conversions..... 19

Coolant
Capacity..... 290
Checking the level..... 224
Notes..... 289

Copyright
License..... 29

Copyrights
Trademarks..... 30

Cornering light..... 90

Correct use..... 24

Cross traffic (warning)..... 172

Crosswind Assist..... 149

Cruise control
Activating/deactivating..... 152
Calling up a speed..... 152
Function..... 152
Requirements:..... 152
Setting a speed..... 152
Storing a speed..... 152

Cup holders
Center console..... 82
Rear passenger compartment..... 83

Customer Assistance Center (CAC)..... 25

D

Damage
Limited protection..... 37

Data processing in the vehicle..... 26

Data protection rights..... 29

Data storage
Data protection rights..... 29
Electronic control units..... 26
Event Data Recorder..... 29
Onboard Logic Unit..... 28
Online services..... 28

Dealership..... 24

Declaration of conformity
Components relevant to radio regulation..... 22

DEF
Displaying the fill level..... 137
Filling quantity..... 287
Refilling..... 137

DEF®, Reducing agent
Additives..... 136
Notes..... 286
Purity..... 136

Definitions (tires and loading)..... 264

Deployed components
Limited protection..... 38

Deployment situations..... 35

Destination entry..... 206

Diagnostics connection..... 23

Dialing a phone number (on-board computer)..... 190

Diesel
Low outside temperatures..... 284
Notes..... 284

Diesel particulate filter
Automatic regeneration..... 124
Displaying load..... 125
Starting/canceling regeneration..... 125

Digital inside rear view mirror..... 102

Digital Operator's Manual..... 17

Digital speedometer..... 188
DIRECT SELECT lever
Engaging drive position..... 128
Engaging neutral..... 127
Engaging park position automatically... 128
Engaging reverse gear..... 127
Function..... 126
Selecting park position..... 128
Transmission position display..... 126
Transmission positions..... 126
Display
Cleaning..... 232
Display (instrument cluster)..... 187
Display message, Message (instrument cluster)
Calling up in the on-board computer.... 298
Notes..... 298
Display messages
- - - mph..... 302
— km/h..... 302
12 V Battery See Operator's Manual..... 315
Add 1 Liter Engine Oil At Next Refueling..... 308
Add 1 Quart Engine Oil At Next Refueling..... 309
ATTENTION ASSIST Inoperative..... 302
ATTENTION ASSIST: Take a Break!..... 301
Automatic Driving Lights Inoperative..... 321
Camera View Restricted See Operator's Manual..... 303
Check Brake Fluid Level..... 310
Check Engine Oil At Next Refueling..... 309
Currently Unavailable See Operator's Manual..... 300
Currently Unavailable See Operator's Manual..... 301
Diesel Particulate Filter Drive at High Engine Speeds See Operator's Manual..... 308
Engine Oil Level Cannot Be Measured..... 309
Engine Oil Level Reduce Oil Level..... 310
Engine Oil Level Stop Switch Off the Vehicle..... 309
Engine Oil Pressure Stop Switch Off Vehicle..... 309
Fault See Operator's Manual..... 320
Front Left Fault Service Required (example)..... 299
Fuel filter Fault Service Required..... 310
Incline Too Steep See Operator's Manual..... 313
Inoperative See Operator's Manual..... 300
Inoperative See Operator's Manual..... 300
EBD Inoperative See Operator's Manual..... 301
Inoperative..... 302
Key Not Detected (white display message)..... 316
Key Not Detected (red display message)..... 316
Key Not Detected Place Key Back into Driver's Area (white display message)..... 317
Key Not Detected Place Key Back into Driver's Area (red display message)..... 317
Left Low Beam (example)..... 320
Left Window Airbag Fault Service Required (example)..... 299
Off..... 302
HOLD Off..... 302
Parking Brake See Operator's Manual (electric parking brake)..... 311
Parking Brake See Operator's Manual (manual parking brake)..... 311
Refill Coolant Immediately See Operator's Manual..... 308
Refill Coolant See Operator's Manual..... 307

Refill Washer Fluid..... 318
Release Parking Brake..... 311
Replace Air Filter..... 308
Replace Key Battery..... 316
Replace Key..... 317
Restraint System Fault Service Required..... 299
Restricted During Trailer Operation..... 304
See Operator's Manual..... 316
Steering Fault Increased Physical Effort See Operator's Manual..... 318
Steering Fault Stop Immediately See Operator's Manual..... 318
Step Not Extended See Operator's Manual..... 318
Stop Vehicle and Do Not Switch Off..... 315
Stop Vehicle See Operator's Manual..... 315
Stop Vehicle To Charge the 12 V Battery Do Not Switch Off Vehicle..... 315
Temporarily Unavailable Sensors Dirty..... 303
To Release the Parking Brake: Switch On the Vehicle..... 310
Vehicle is Ready to Drive Switch Off the Ignition Before Exiting... 318
4MATIC Currently Unavailable..... 320
4MATIC Inoperative..... 320
120 km/h Maximum Speed Exceeded..... 301
Active Brake Assist Range of Functions Currently Reduced See Operator's Manual..... 306
Active Brake Assist Reduced Range of Functions See Operator's Manual.... 307
Active Distance Assist Available Again..... 305
Active Distance Assist Currently Unavailable See Operator's Manual..... 304
Active Distance Assist Inoperative..... 304
Active Lane Keeping Assist Currently Unavailable See Operator's Manual..... 306
Active Lane Keeping Assist Inoperative..... 306
Active Lane Keeping Assist Reduced Range of Functions See Operator's Manual..... 305
Adaptive Highbeam Assist Currently Unavailable See Operator's Manual..... 321
Adaptive Highbeam Assist Inoperative..... 321
Air Conditioning System Fault See Operator's Manual..... 307
Apply Brake to Shift from Drive Range P..... 319
Blind Spot Assist and Exit Warning Inoperative..... 305
Blind Spot Assist and Exiting Warning Currently Unavailable See Operator's Manual..... 305
Check Brake Pads See Operator's Manual..... 310
Check Tires..... 313
Cruise Control Inoperative..... 302
Do Not Change Drive Range Service Required..... 319
Moving-off Information Assist Inoperative..... 304
N Permanently Active: Risk of Rolling.. 319
Only Shift to Drive Range P when Vehicle is Stationary..... 320
PARKTRONIC Inoperative See Operator's Manual..... 307
Place Key in the Marked Space See Operator's Manual..... 316
Please Correct Tire Pressure..... 313
Reversing Not Possible Service Required..... 319
Risk of Rolling Driver's Door Open Drive Range P Not Selected..... 319

Risk of Rolling Driver's Seat Not Occupied Drive Range P Not Selected..... 319
Shift to Drive Range P or N to Start Engine..... 319
Sideguard Assist Currently Unavailable..... 305
Sideguard Assist Inoperative..... 305
SOS NOT READY..... 320
Speed Limit (Winter Tires) XXX mph.... 301
Tire Press. Monitoring System Currently Unavailable..... 314
Tire Pressure Monitoring System Inoperative..... 314
Tire Pressure Monitoring System Inoperative Tire Pressure Sensors Missing..... 314
Tire Pressure Sensors Missing..... 314
To Deselect Drive Range P or N Depress Brake and Start Vehicle..... 319
To Engage Drive Range R First Depress the Brake..... 319
Traffic Sign Assist Currently Unavailable See Operator's Manual..... 302
Traffic Sign Assist Inoperative..... 302
Transmission Fault Stop..... 320
Warning Tire Fault..... 314
Wiper Fault..... 317

Displaying range (trip menu)..... 188
Displaying total distance (trip menu), Odometer..... 188
Displays (on-board computer)..... 187
Distance control..... 155
Distance warning..... 149
DISTRONIC..... 155
Door
Activating/deactivating the automatic locking mechanism..... 52
Locking/unlocking mechanical key..... 53
Opening (from the inside)..... 51
Unlocking (from the inside)..... 51
Door control panel..... 13
DOT, Tire Identification Number (TIN)..... 262
Double co-driver's seat..... 75
Downhill driving assist..... 153
Activating/deactivating DSR..... 154
Notes..... 153
Drinking and driving..... 115
Drive Away Assist..... 170
Driving in winter..... 119
Driving instructions
Brakes..... 118
Breaking-in notes..... 115
Downhill gradient..... 118
Driving abroad (information)..... 117
Driving in winter..... 119
Light adjustment when driving abroad... 88
Limit speed..... 117
Limited braking effect (salt-treated roads)..... 118
New brake disks/brake linings..... 118
Parking brake..... 118
Short-distance trips..... 117
Slippery road surfaces..... 119
Subjecting brakes to a load..... 118
Wet road surfaces (brake)..... 118
Driving notes
Drinking and driving..... 115
General driving tips..... 115
Transport by rail..... 117
Driving safety system
ABS (anti-lock braking system)..... 147
Active Brake Assist..... 149
ASR (acceleration skid control)..... 148
ATTENTION ASSIST..... 166
BAS (Brake Assist System)..... 147
Blind Spot Assist..... 172
Cameras..... 146
Cruise control..... 152
EBD (Electronic Brakeforce Distribution)..... 149
ESP® (Electronic Stability Program)..... 148
ESP® Crosswind Assist..... 149
ESP® trailer stabilization..... 149
Hill Start Assist..... 157
HOLD function..... 157
Overview..... 147
Radar and ultrasonic sensors..... 146
Traffic Sign Assist..... 167
Your responsibility..... 145
Driving system..... 147
Driving tips
Driving off-road..... 120
Driving on flooded roads..... 119
Driving on wet roads..... 119
Hydroplaning..... 119

Mountainous terrain..... 123

Drowsiness detection..... 166

DSR
Changing the target speed..... 154

DSR (Downhill Speed Regulation)..... 153
Activating/deactivating..... 154
Notes..... 153

Dual-zone automatic climate control (control panel)..... 105

Dynamic handling control system..... 148

E

E10, Fuel (gasoline)..... 283

EBD, Electronic Brakeforce Distribution..... 149

ECO display
Function..... 124
Resetting..... 189

Electric parking brake
Automatically applying..... 143
Emergency braking..... 144
Manually applying/releasing..... 144
Notes..... 143
Releasing automatically..... 144

Electric sliding door
Function..... 56
Open/close with button..... 56
open/close with key button..... 57
Opening with the door handle..... 57
Opening/closing (from the inside)..... 56
Resetting..... 58
Unlocking manually..... 58

Electrical closing assist (sliding door)..... 56

Electrical fuses
Notes..... 246

Electrical step
Emergency release..... 62
Obstruction..... 62
Preventing extension..... 62
Retracting/extending..... 62

Electronic Stability Program..... 148
Activating/deactivating..... 148

Electronics
Engine electronics..... 278
Installing two-way radios..... 278

Emergency
Assistance overview..... 15
First-aid kit (soft-sided)..... 234
Safety vest..... 234
Warning lamp..... 234

Emergency braking
Electric parking brake..... 144
Manual parking brake..... 142

Emergency call system
Automatic emergency call..... 235
Information..... 235
Manual emergency call..... 236
Overview..... 235
Transferred data..... 236

Emergency exit
Emergency hammer..... 234

Emergency hammer..... 234

Emergency key
Removing/inserting..... 49

Emergency operation mode
Starting the vehicle..... 114

Emergency Tensioning Devices
Inflating..... 35

Energy consumption
SmartKey..... 49

Energy consumption (on-board computer)..... 188

Engaging drive position (automatic transmission)..... 128

Engaging neutral (automatic transmission)..... 127

Engaging reverse gear (automatic transmission)..... 127

Engine
Problems (fuel/fuel tank)..... 135
Starting assistance..... 238
Switching off (start/stop button)..... 140

Engine electronics..... 278

Engine number..... 280

Engine oil, Oil
Additives..... 287
Capacity..... 287
Checking the oil level (on-board computer)..... 223
Topping up..... 223

Engine output
Notes on changes..... 24

ENR (electronic level control)
Function..... 130
Manually pumping up the air bellows... 133
Problems..... 133
Raising/lowering..... 131

Environmental protection
Driving style..... 18

Environmentally friendly driving style..... 18
ESC, Electronic Stability Control..... 148
ESP®..... 148
Activating/deactivating..... 148
Crosswind Assist..... 149
Function..... 148
Trailer stabilization..... 149
Event Data Recorder..... 29
Exhaust emission monitoring..... 117
Exhaust gas aftertreatment..... 286
Exit warning
Blind Spot Assist..... 172
Exiting a parking space
Drive Away Assist..... 170
PARKTRONIC..... 158
Exterior lighting
Care..... 230
Light switch..... 88
Replacing illuminants (front)..... 95

F

Factory settings
MBUX reset function..... 205
Fastening..... 33
Favorites..... 201
First aid
First-aid kit (soft-sided)..... 234
First-aid kit (soft-sided)..... 234
Flat tire
Changing a wheel..... 268
Notes..... 236
Tire-change tool kit..... 268
Floor covering
Installing/removing (starter battery).... 240
Floor mats..... 86
Foil covering
Radar and ultrasonic sensors..... 146
Free software..... 29
Frequencies
Mobile phone..... 279
Two-way radios..... 279
Front air bag..... 38
Inflating..... 35
Front seat
8-way adjustment options..... 71
Adjustment (electric)..... 71
Manual adjustment with Comfort Package..... 70
Manual adjustment without Comfort Package..... 68
Rotating..... 74
Fuel
Diesel..... 284
Draining the filter..... 227
E10..... 283
Flexible-fuel vehicles..... 283
Gasoline..... 283
Low outside temperatures..... 284
Problems..... 135
Quality (diesel)..... 284
Quality (gasoline)..... 283
Refueling..... 133
Sulfur content..... 283
Tank content and fuel reserve..... 285
Use of additives..... 284
Fuel tank
Problems..... 135
Function in the event of an accident
Information (how the restraint system works)..... 35
Fuses
Fuse box (co-driver footwell)..... 246
Fuse box (seat base of driver's seat).... 246
Notes..... 246

G

Gasoline..... 283
Genuine parts..... 18
Genuine wood (care)..... 232
Getting in/getting out..... 54
Grab handles
Notes..... 68
Using..... 54
Gross axle weight rating..... 280
Gross vehicle weight..... 280
Gross vehicle weight rating..... 280

H

Handbrake (manual)..... 141
Handling characteristics
Unusual..... 250
Hazard warning light system..... 90
Hazard warnings
Car-to-X-Communication..... 208
Head restraint
Adjusting manually..... 79
Headlamp flashing..... 89

Headliner (care)..... 232
Heating system..... 104
High beam
Activating/deactivating..... 89
Adaptive Highbeam Assist..... 91
Changing bulbs..... 95
Hill Start Assist..... 157
HOLD function..... 157
Notes..... 157
Switching on/off..... 158
Home screen
Media display..... 198
Hydroplaning..... 119

I

Identification plate..... 280
Immobilizer..... 65
Impact protection
Close-range braking..... 171
Inattention detection..... 166
Incorrect behavior by vehicle occupants
Limited protection..... 36
Indicator
Changing bulbs (front)..... 95
Indicator lamps
Overview..... 8
Inside rear view mirror
Digital inside rear view mirror..... 102
Inside rearview mirror
Adjusting/setting anti-glare mode..... 103
Installation of accessories
Limited protection..... 36
Installations..... 19
Instrument cluster, Instrument display..... 8
Adjusting the lighting..... 191
Function/notes..... 185
Information on the display..... 187
Menu overview..... 187
Notes..... 185
Overview..... 185
Instrument lighting, Dashboard lighting..... 191
Instrument panel
Cockpit..... 6
Intelligent light system
Adaptive Highbeam Assist..... 91
Cornering light..... 90
Interior lamp
Replacing illuminants (rear passenger compartment)..... 99
Interior lighting
Box bodies..... 92
Cargo compartment..... 94
Equipment (bus)..... 93
Motion detector (rear passenger compartment)..... 94
Rear passenger compartment..... 94
Setting..... 91
Switch-off delay time..... 94
Interior motion sensor
Activating/deactivating..... 67
Function..... 67
Internet
Setting up a Wi-Fi hotspot..... 203
ISOFIX child seat anchor
Installing..... 43

J

Jack
Hydraulic..... 248
Removing from stowage compartment (hydraulic jack)..... 248
Storage location..... 268
Storage location (hydraulic jack)..... 248
Journeys abroad
Light adjustment low beam..... 88
Notes..... 117
Jump-start connection, Starting assistance..... 238

K

Key
Battery..... 49
Central locking system..... 49
electric sliding door open/close..... 57
Emergency key..... 49
Fastening to keyring..... 49
Functions..... 48
Problem..... 50
Radio connection..... 48
Unlocking setting..... 49

L

Lamp..... 95
Lane recognition..... 176
Language
Notes..... 204
Setting..... 205

Level regulation..... 130
License plate (front)..... 22
License plate assembly (front)..... 22
License plate lamp
Replacing light bulbs..... 98
Light
Combination switch..... 89
Headlamp flashing..... 89
High beam..... 89
Turn signal light..... 89
Light switch (overview)..... 88
Lights, Lighting
Activating/deactivating the surround lighting..... 91
Adaptive Highbeam Assist..... 91
Adjusting the instrument lighting..... 191
Automatic driving lights..... 88
Cornering light..... 90
Hazard warning lights..... 90
Headlamp range..... 89
Light adjustment when driving abroad... 88
Light switch..... 88
Low beam..... 88
Rear fog light..... 88
Responsibility with lighting systems..... 88
Sidelights..... 88
Switch-off delay time..... 91
Limit speed
Notes..... 117
Limited Warranty..... 26
Load
Determining the maximum..... 259
Sample calculation..... 260
Load distribution..... 216
Load securing
Cargo tie-down points..... 217
Notes..... 216
Load-bearing capacity (tires)..... 263
Loading
Definitions..... 264
Loading guidelines..... 215
Loading information table..... 259
Locking/unlocking
Activating/deactivating the automatic locking mechanism..... 52
Automatic locking (MMS)..... 52
Doors (interior)..... 51
Mechanical key..... 53
Low beam
Activating/deactivating..... 88
Changing bulbs..... 95
Light adjustment when driving abroad... 88
Lubricants
Additives (engine oil)..... 287
Notes on operating fluids..... 282
Lumbar support (4-way)..... 73

M

M+S tires..... 251
Maintaining a safe distance
Active Distance Assist DISTRONIC..... 156
Maintenance
Paint..... 229
Vehicle..... 20
Malfunction
Restraint system..... 34
Malfunction message
Notes on display messages..... 298
Maneuvering
Close-range braking..... 171
Maneuvering assistant
Close-range braking..... 171
Drive Away Assist..... 170
Manual parking brake
Applying/releasing..... 141
Emergency braking..... 142
Folding up/down..... 142
Manually pumping up the air bellows (electronic level control)..... 133
Map
Displaying online map contents..... 208
Displaying weather information..... 208
Moving..... 208
Selecting the map orientation..... 208
Setting the map scale..... 208
Map functions..... 208
Maximum load
Determining..... 259
Sample calculation..... 260
Maximum tire load..... 262
Maximum tire pressure..... 263
MB Apps
Calling up Digital Extras..... 196
Calling up the Mercedes me ID user account..... 195
Unlinking the Mercedes me ID user account..... 196
MBUX multimedia system
Factory setting..... 205

Home screen..... 198
Language settings..... 199
MB Apps..... 195
Media..... 213
Notes..... 197
Overview..... 197
Standby mode function..... 145
Touchscreen..... 198

MBUX Voice Assistant..... 199
Function..... 199
Voice prompting..... 200

Mechanical key
Locking/unlocking the door..... 53

Media
Menu (on-board computer)..... 190
Operating media playback (on-board computer)..... 190
Overview of functions/symbols..... 213
Selecting a media source (on-board computer)..... 190

Media display..... 198
Operating..... 198

Medical aids..... 25

Memory function
Outside mirrors..... 73
Seat..... 73

Menu (on-board computer)
Assistance graphic..... 187
Media..... 190
Navigation..... 189
Overview..... 187
Radio..... 190
Service..... 187
Telephone..... 190
Trip..... 188

Mercedes-Benz Connect
Accident and Breakdown Management Digital Extras..... 194
Information..... 194
Making a call via the overhead control panel..... 192
Transferred data..... 195

Mercedes-Benz emergency call system
Self-diagnosis..... 236

Mercedes-Benz Support calls
Arranging a service appointment..... 192
Information on the call via the overhead control panel..... 192
Making a call via the overhead control panel..... 192
Mercedes-Benz Support..... 192
Transferred data..... 193

Message memory..... 298

Mirror
Adjusting/setting anti-glare mode (inside rearview mirror)..... 103
Adjusting/setting anti-glare mode (outside mirrors)..... 101

Mirrors
Digital inside rear view mirror..... 102

Mobile phone
Charging (USB socket)..... 85
Frequencies..... 279
Maximum transmission output..... 279
Wireless charging (front)..... 86

Modification
Limited protection..... 37

Motion detector (cargo compartment)..... 94

Mounting a load..... 215

Moving-off Information Assist
Activating/deactivating..... 176
Function..... 175
System limits..... 175
Warning by Moving-off Information Assist..... 176

Multi Purpose Vehicle (MPV)..... 25

Multimedia system..... 197

N

Navigation
Activating..... 205
Destination entry..... 206
Menu (on-board computer)..... 189
Overview..... 205

Navigation instructions (on-board computer)..... 189

O

Objects in the vehicle interior
Limited protection..... 36

Occupant presence detection
Activating/deactivating..... 47

Occupant presence reminder
Function..... 46

Occupant safety..... 31
Air bag..... 38
Automatic measures after an accident.. 34
Basic information..... 31
Child seat..... 39
Information on the child restraint system..... 34

Information on the correct seat position..... 31
Occupant presence reminder..... 46
Pets in the vehicle..... 37
Pregnancy (seat belt)..... 33

On-board computer, Computer..... 186
Assistant display menu..... 187
Diesel particulate filter load display..... 125
Display..... 187
Displaying the service due date..... 220
Media menu..... 190
Menu navigation..... 189
Menu overview..... 187
Operating..... 186
Radio menu..... 190
Service menu..... 187
Telephone menu..... 190
Trip menu..... 188

On-board diagnostic interface..... 23

On-board electronics
Engine electronics..... 278
Installing two-way radios..... 278

Onboard Logic Unit
Data storage..... 28
Online services..... 28

Online services..... 28

Open-source software..... 29

Opening/closing the hood..... 220

Operating fluids..... 290
Additives (fuel)..... 284
Brake fluid..... 289
DEF®..... 286
Diesel..... 284
Engine oil..... 287
Gasoline..... 283
Notes..... 282
Notes on coolant (engine)..... 289
Refrigerant (air conditioning system)... 290
Windshield washer fluid..... 290

Operating safety
Changes in the engine output..... 24
Information..... 21

Operating system
On-board computer..... 186

Operator's Manual digital..... 17

Outside mirrors
Adjusting/setting anti-glare mode..... 101
Blind Spot Assist..... 172
Folding in/out..... 101
Memory function..... 73
Setting options..... 13

Overhead control panel
Adjusting the interior lighting..... 91
Overview..... 9

P

Paint code..... 280

Park position
Engaging..... 128
Engaging automatically..... 128

Parking
PARKTRONIC..... 158

Parking Assist
PARKTRONIC..... 158

Parking Assist PARKTRONIC
Activating/deactivating..... 160
Close-range braking..... 171
Function..... 158

Parking assistance system
Close-range braking..... 171

Parking assistance systems
Drive Away Assist..... 170
PARKTRONIC..... 158

Parking brake (manual)..... 141

Parking brake lever..... 141

Parking for an extended period..... 144

PARKTRONIC..... 158

Partition sliding door
Opening/closing..... 61

Permissible towing methods..... 242

Personalization..... 200

Pets in the vehicle..... 37

Placing a load on the wheel arch..... 218

Plastic trim (care)..... 232

Post-collision brake..... 35

Power supply
Battery main switch..... 126
Switching on (start/stop button)..... 112

Power washer (care)..... 228

Pregnancy
Information on the correct seat position..... 31
Seat belt..... 33

Profile..... 200

Protection
Information (how the restraint system works)..... 35
Limited..... 36

Pulling away..... 157

Q

QR code rescue card..... 26
Qualified specialist workshop..... 24

R

Radar and ultrasonic sensors
Damage..... 146
Radar sensors
Care..... 230
Radio..... 213
Menu (on-board computer)..... 190
Radio connection
Key..... 48
Radio regulations
Regulatory radio identification..... 279
Rated tensile force of tie-down eyes..... 296
Rear compartment climate control
Automatic control..... 107
Setting..... 106
Rear compartment lighting (motion detector)..... 94
Rear Cross Traffic Alert, Cross traffic warning..... 172
Function..... 172
Rear fog light..... 88
Rear window wiper
Switching on/off..... 100
Rear-end doors
Opening beyond 90°..... 60
Opening/closing (from the inside)..... 61
Opening/closing (from the outside)..... 59
Refilling
Displaying the DEF level..... 137
Refrigerant (air conditioning system)..... 290
Refueling
Refilling DEF..... 137
Refueling the vehicle..... 133
Regeneration
Notes..... 124
Starting/canceling..... 125
Registration..... 24
Regulating headlamp range..... 89
Regulatory radio information
Specific absorption rate..... 279
Remote Online
Cooling/heating the vehicle interior.... 113
Starting the vehicle..... 114
Replacement key, Spare key..... 50
Replacing
Fuses..... 246
Replacing an illuminant
Additional turn signal light (all-wheel drive vehicles)..... 96
Backup light (Cargo Van/Tourer)..... 97
Rear turn signal lights (Cargo Van/Tourer)..... 97
Tail lamp illuminant types (Cargo Van/Tourer)..... 96
Replacing light bulbs
Backup lamp (chassis)..... 98
Interior lamp (rear passenger compartment)..... 99
License plate lamp..... 98
Light sources (front)..... 95
Notes..... 95
Turn signal lights (chassis, rear)..... 98
Reporting safety defects..... 26
Rescue card, QR code..... 26
Resetting
MBUX reset function..... 205
Responsibility
Driving safety systems..... 145
Restraint system
Basic information..... 31
Basic instructions for children..... 39
Deployment situations..... 35
Functionality..... 34
Information on mode of operation..... 35
Information on the correct seat position..... 31
Limited protection..... 37
Malfunction..... 34
Protection..... 31
Self-test..... 34
Warning lamp..... 34
Restricting the shift range..... 128
Reverse gear
Deactivating/activating the warning tone..... 123
Reverse warning device..... 123
Reversing camera
Activating via GPS..... 166
Care..... 230
Function..... 160
Managing activation points..... 166
Roadside Assistance (breakdown)..... 20
Roll-away prevention..... 157
Roof load..... 296

Roof luggage rack, Carrier system
Loads..... 296
Securing..... 218

Roof ventilator
Activating/deactivating cargo compartment ventilation..... 111

Route
Alternative route..... 207
Calculating..... 207
Commuter route..... 207
Navigation..... 205
Selecting a type..... 207

S

Safety system..... 147

Safety vest..... 234

Seat, Driver's seat
4-way lumbar support..... 73
8-way adjustment options..... 71
Adjusting the head restraint manually.... 79
Adjusting the seat backrests (rear bench seat)..... 79
Adjusting the seat surface (co-driver bench seat)..... 75
Correct driver's seat position..... 68
Door control panel..... 13
Electrical adjustment (front)..... 71
Folding the folding seat up/down..... 75
Installing/removing rear bench seat..... 76
Manual adjustment without Comfort Package (front)..... 68, 70
Memory function..... 73
Notes for vehicles without a front passenger seat..... 75
Rotating (front seat)..... 74
Side impact air bag..... 38
Switching seat heating on/off..... 80

Seat belt
Adjusting the height..... 33
Cleaning..... 232
Fastening..... 33
Notes on wearing correctly..... 32
Unfastening..... 38
Warning lamp..... 34
Wearing during pregnancy..... 33

Seat belt warning..... 34

Seat cover (care)..... 232

Seats, Rear bench seat..... 76

Securing loads
Tie-down eyes..... 217

Securing luggage..... 215

Selector lever..... 126

Self-test
Restraint system..... 34

Sensors
Information..... 146

Sensors (care)..... 230

Service (on-board computer)..... 187

Service center..... 24

Setting the air distribution..... 108

Short-distance trips..... 117

Side windows
Closing with the SmartKey..... 64
Convenience closing..... 64
Convenience opening..... 64
Opening with the SmartKey..... 64
Opening/closing..... 63
Problem..... 65
Resetting..... 65

Sideguard Assist
Function and notes..... 173
Switching warning tones on/off..... 174
System limits..... 174
Warning by Sideguard Assist..... 175

Sidelights..... 88

Size designation (tires)..... 263

Sliding door
Child safety lock..... 45
electric sliding door..... 56
Electrical closing assist..... 56
Function..... 56
Open/close with button..... 56
Opening/closing (from the inside)..... 55
opening/closing (from the outside)..... 54

Slippery road surfaces..... 119

SmartKey
Acoustic locking verification signal..... 49
Deactivating the function..... 49
Energy consumption..... 49

Smartphone integration
Android Auto..... 211
Apple CarPlay®..... 211

Snow chains, Anti-skid chains..... 251

Socket
Trailer hitch..... 181

Socket (12 V)
Center console (front)..... 84

Socket (115 V)
Front center console..... 84
Notes..... 84

Software update..... 202
SOS button..... 192
Sound
Menu..... 214
Sound settings..... 214
Spare parts..... 18
Spare wheel
Installing/removing..... 275
Notes..... 273
Special seat belt retractor..... 43
Specialist workshop..... 24
Specific absorption rate (SAR)..... 279
Speed
storing, cruise control..... 156
storing, DISTRONIC..... 156
Speed control
Active Distance Assist DISTRONIC..... 155
Cruise control..... 152
Speed limit
Winter tires..... 153
Speed rating (tires)..... 263
Speedometer (digital)..... 188
Start-off Assist..... 157
Start/stop button
Parking the vehicle..... 140
Starting the vehicle..... 113
Switching on the power supply or the vehicle..... 112
Starting
Remote Online..... 114
Starting the engine
Remote Online..... 114
Starting-off aid
Drive Away Assist..... 170
Hill Start Assist..... 157
Steering wheel
Adjusting..... 81
Driver's air bag..... 38
Steering wheel heater..... 81
Steering wheel heater..... 81
Step (electrical)..... 62
Stopping the alarm..... 66
Stowage areas..... 82
Stowage compartment (vehicle tool kit)..... 247
Stowage space
Armrest..... 82
Bottle holder..... 82
Center console..... 82
Door..... 82
Glove box..... 82
Substances hazardous to health..... 21
Sulfur content, Fuel (gasoline)..... 283
Summer tires..... 250
Surround lighting..... 91
Switch-off delay time
Exterior..... 91
Interior..... 94
Switching on the vehicle (start/stop button)..... 112
Switching seat heating on/off..... 80
Switching the rear window heater on/off... 109
Switching the windshield heater on/off..... 109
Synchronization function..... 108
System settings
MBUX reset function..... 205
Overview..... 202

T

Tailpipes (care)..... 230
Tank content
DEF..... 287
Fuel..... 285
Reserve..... 285
Technical data
Coolant filling capacity..... 290
DEF filling quantity..... 287
Engine oil filling capacity..... 287
Information..... 278
Notes on trailer hitch..... 292
Radio regulations..... 279
Specific absorption rate (SAR)..... 279
Tank content and fuel reserve..... 285
Tire pressure monitoring system..... 258
Vehicle dimensions..... 291
Vehicle identification plate..... 280
Telephone, Smartphone
Bluetooth® telephony..... 211
Charging wirelessly (mobile telephone in front)..... 86
Connecting a mobile phone..... 211
Menu..... 211
Menu (on-board computer)..... 190
Notes..... 210
Operating modes..... 211
Secure Simple Pairing..... 211
Telephone menu overview..... 211

Temperature
Setting centrally..... 108
Tie-down eyes
installing/removing..... 217
Load..... 296
Tire and Loading Information placard..... 259
Tire Identification Number (TIN)..... 262
Tire information table..... 259
Tire labeling, Labeling (tires)
Characteristics..... 263
DOT, Tire Identification Number (TIN).. 262
Load-bearing capacity..... 263
Maximum tire load..... 262
Maximum tire pressure..... 263
Overview..... 261
Size designation..... 263
Speed rating..... 263
Temperature grade..... 261
Tire quality grades..... 261
Tread wear grade..... 261
Tire load (maximum)..... 262
tire pressure..... 257
Checking manually..... 257
Maximum..... 263
Notes..... 252
Restarting the tire pressure monitor.... 258
Tire pressure table..... 256
tire pressure monitoring system
Checking air pressure..... 257
Checking temperature..... 257
Function..... 256
Technical data..... 258
Tire pressure table..... 253, 256
tire temperature
Checking..... 257
Tire pressure monitoring system..... 256
Tire tread..... 250
Tire-change tool kit..... 268
Tires
Characteristics..... 263
Checking..... 250
Checking temperature..... 257
Definitions..... 264
Direction of rotation..... 268
DOT, Tire Identification Number (TIN).. 262
Installing..... 271
Load-bearing capacity..... 263
M+S tires..... 251
Maximum tire load..... 262
Maximum tire pressure..... 263
Mounting..... 266
Noise..... 250
Overview of tire labeling..... 261
Removing..... 271
Replacing..... 266, 268
Restarting the tire pressure monitor.... 258
Selection..... 266
Size designation..... 263
Snow chains..... 251
Speed rating..... 263
Storing..... 268
Summer tires..... 250
Tire and Loading Information placard.. 259
Tire pressure monitoring system..... 256
Tire pressure table..... 253, 256
Tire quality grades..... 261
Unusual handling characteristics..... 250
Wheel size categories..... 268
Top Tether..... 44
Touch Control
MBUX..... 198
On-board computer..... 186
Touchscreen..... 198
Tow-away alarm
Activating/deactivating..... 66
Function..... 66
Tow-starting..... 245
Towing
Raised front/rear axle..... 244
with both axles on the ground..... 242
Towing eye
Installing/removing..... 245
Storage location..... 245
Towing methods..... 242
Traffic Sign Assist
Function..... 167
Setting..... 170
Trailer hitch
Care..... 230
Coupling/uncoupling a trailer..... 181
Information..... 182
Information about trailer operation..... 179
Notes..... 292
Permissible trailer loads and trailer drawbar noseweights..... 182
Power supply..... 183
Socket..... 181
Trailer loads..... 292
Trailer operation
Active Lane Keeping Assist..... 176
Coupling/uncoupling a trailer..... 181
Information..... 182

Notes..... 179
Permissible trailer loads and trailer drawbar noseweights..... 182
Power supply..... 183
Socket..... 181
Trailer loads..... 292

Trailer stabilization..... 149

Transmission position display..... 126

Transport (vehicle)..... 244

Transport by rail..... 117

Trim element (care)..... 232

Trip
Displaying total distance..... 188
Menu (on-board computer)..... 188

Trip computer
Displaying..... 188
Resetting..... 189

Trip distance, Distance recorder, Trip odometer
Displaying..... 188
Resetting..... 189

Turn signal light
Operating the combination switch for the light..... 89
Replacing light bulbs (chassis, rear)..... 98

Turn signal lights
Replacing illuminants (additional turn signal light, all-wheel drive vehicle)..... 96
Replacing illuminants (Cargo Van/Tourer, rear)..... 97

Two-way radios
Frequencies..... 279
Installation..... 278
Maximum transmission output..... 279

U

Unfastening..... 38

Unlocking setting..... 49

Updates..... 202

USB socket (front)..... 85

User profiles
Adding a user..... 201
Note..... 200
Selecting options..... 201

Using kickdown, Acceleration..... 129

Using the chock..... 145

V

Vehicle
Activating, Remote Online..... 114
Activating/deactivating the automatic locking mechanism..... 52
Correct use..... 24
Data storage..... 26
Diagnostics connection..... 23
Identification plate..... 280
Limited Warranty..... 26
loading..... 244
lock automatically..... 52
lock automatically (MMS)..... 52
Locking/unlocking (from the inside)..... 51
Locking/unlocking mechanical key..... 53
Lowering..... 272
Maintenance..... 20
Medical aids..... 25
Parking for an extended period..... 144
Problem notification..... 25
QR code rescue card..... 26
Raising..... 269
Registration..... 24
Standby mode function..... 145
Starting (emergency operation mode)..... 114
Starting (start/stop button)..... 113
Switching off (start/stop button)..... 140
Switching on the power supply (start/stop button)..... 112
Ventilating (convenience opening)..... 64

Vehicle cameras, Cameras..... 146

Vehicle data
Vehicle height..... 291
Vehicle length..... 291
Vehicle width..... 291
Wheelbase..... 291

Vehicle identification number..... 280

Vehicle identification plate..... 280

Vehicle interior
Cooling/heating (Remote Online)..... 113

Vehicle key..... 48

Vehicle level
ENR (electronic level control)..... 130
Raising/lowering..... 131

Vehicle operation
Outside the USA or Canada..... 20

Vehicle sensors..... 146

Vehicle start
Remote Online..... 114

Vehicle tool kit, Tool
Information..... 247
Removing..... 247
Stowage compartment..... 247
Towing eye..... 245

Vehicles without a front passenger seat
Notes..... 75

Vents..... 109

VIN..... 280

Voice assistant
Voice prompting..... 200

W

Warning lamp..... 234

Warning system..... 65

Warning tone, reverse gear..... 123

Warning tones
Sideguard Assist..... 174

Warning/indicator lamp
ABS warning lamp..... 324
Active Brake Assist warning lamp..... 325
BRAKE Brakes warning lamp (red)..... 324
Check Engine warning lamp..... 326
Coolant warning lamp 326, 327, 328
Distance warning lamp..... 325
Door indicator lamp..... 326
Electrical malfunction warning lamp..... 326
OFF ESP® OFF warning lamp..... 323
ESP® warning lamp flashes..... 322
ESP® warning lamp lights up..... 323
Fuel reserve warning lamp..... 326
PARK Parking brake indicator lamp (red)..... 323
Parking brake indicator lamp (yellow)..... 323
Power steering warning lamp (red)..... 325
Restraint system warning lamp..... 322
Seat belt warning lamp flashes..... 322
Seat belt warning lamp lights up..... 322
TCO Tachograph warning lamp..... 325
Tire pressure monitoring system warning lamp flashes..... 328
Tire pressure monitoring system warning lamp lights up..... 328

Warning/indicator lamps
Overview..... 321

Warranty terms and conditions..... 20

Washer fluid
Information..... 290
Notes..... 290

Washing by hand..... 229

Wear
Limited protection..... 37

Weather information..... 208

WET WIPER SYSTEM..... 100

Wheel rotation..... 267

Wheel wrench..... 268

Wheels
Care..... 230
Changing..... 267
Characteristics of the tire..... 263
Checking..... 250
Checking air pressure..... 257
Checking temperature..... 257
Definitions..... 264
DOT, Tire Identification Number (TIN).. 262
Flat tire..... 236
Installing..... 271
Load-bearing capacity..... 263
Maximum tire load..... 262
Maximum tire pressure..... 263
Mounting..... 266
Noise..... 250
Overview of tire labeling..... 261
Removing..... 271
Replacing..... 266, 268
Restarting the tire pressure monitor.... 258
Selection..... 266
Size designation..... 263
Snow chains..... 251
Speed rating..... 263
Storing..... 268
Tire and Loading Information placard.. 259
Tire pressure..... 252
Tire pressure monitoring system..... 256
Tire pressure table..... 253, 256
Tire quality grades..... 261

Tread wear grade..... 261
Unusual handling characteristics..... 250
Wheel size categories..... 268

Wheels (care)..... 230

Wi-Fi
Setting up a hotspot..... 203

Window curtain air bag..... 38

Windows
Opening/closing..... 63

Windows (care)..... 230

Windshield
Replacing the wiper blades..... 100

Windshield washer fluid
Information..... 290
Notes..... 290

Windshield wiper
Replacing wiper blades (rear window)..... 101
Switching on/off (rear window)..... 100

Windshield wipers
Replacing the wiper blades..... 100
Replacing the wiper blades (WET WIPER SYSTEM)..... 100
Replacing the wiper blades (windshield)..... 100
Switching on/off..... 99
Switching on/off (windshield)..... 99

Winter operation..... 251

Winter tires
Notes..... 251
Setting the permanent speed limit..... 153
Speed limiter..... 153

Wiper blades
Care..... 230
Replacing (rear window)..... 101
Replacing (WET WIPER SYSTEM)..... 100
Replacing (windshield)..... 100

Wireless charging
Mobile telephone (front)..... 86
Notes..... 85

Workshop..... 24